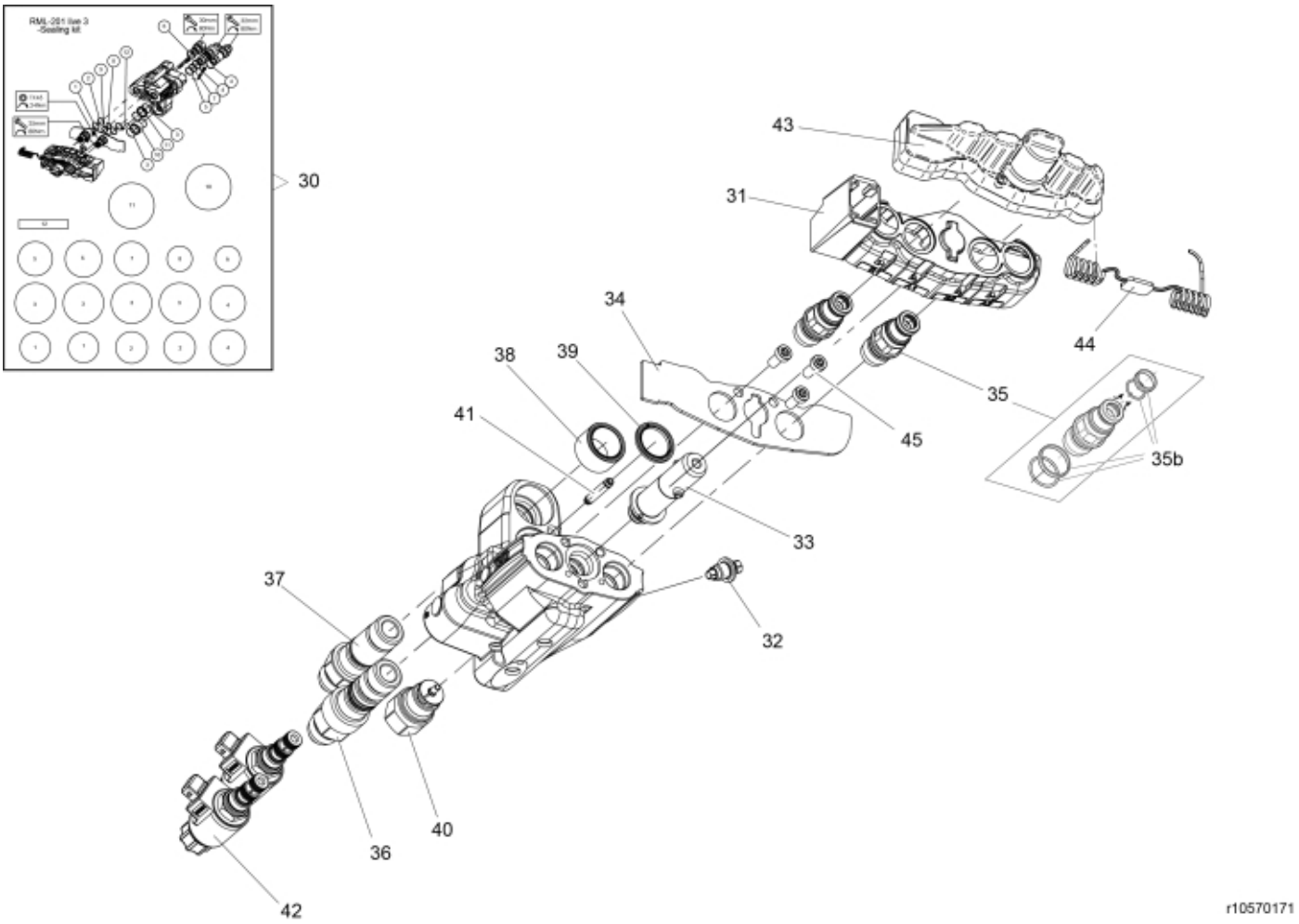

© 2025 Jost

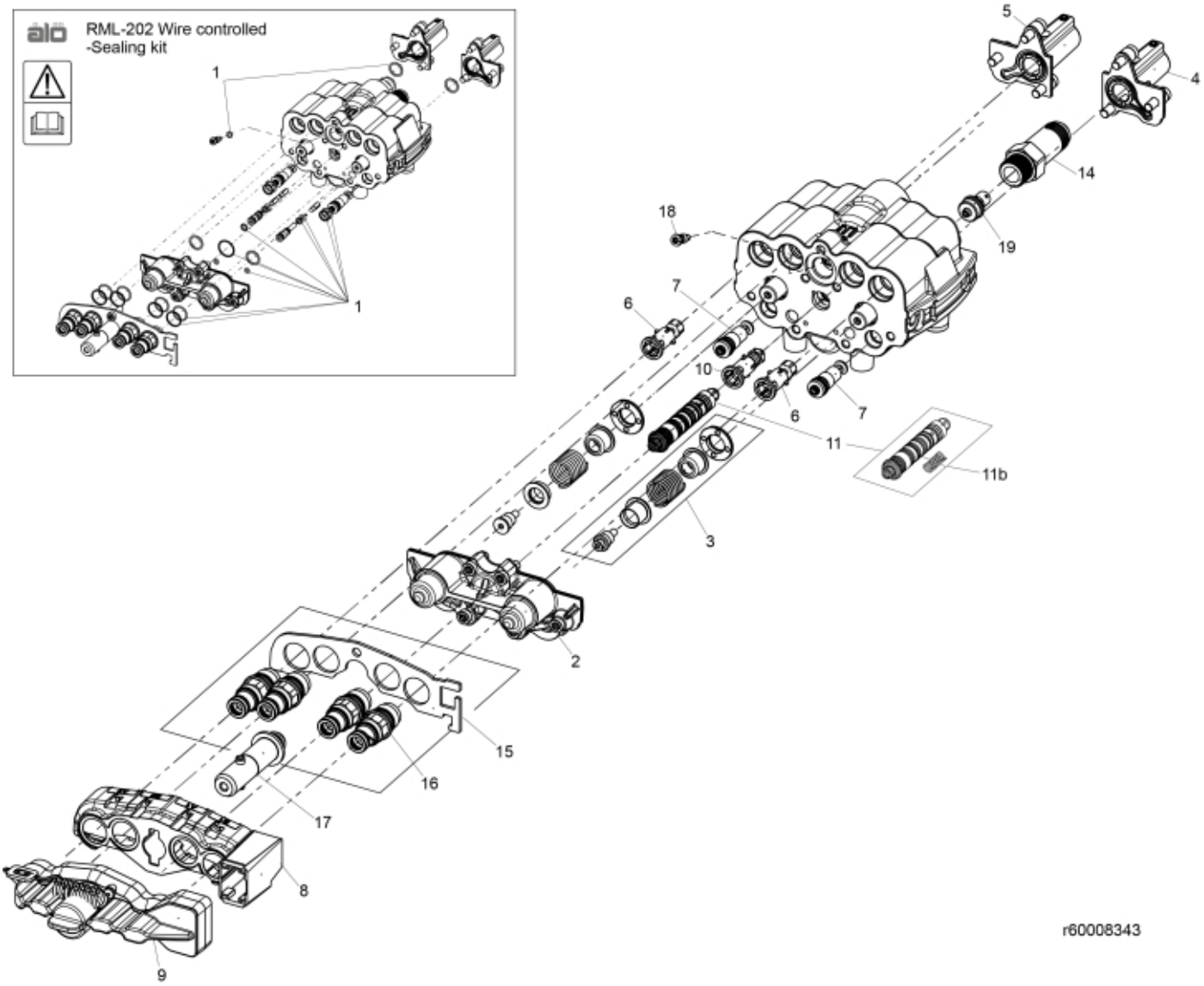
RML-202 Wire controlled
-Sealing kit
1
1
5
4
14
19
18
7
6
10
6
7
11
11b
3
2
15
16
17
8
9
r60008343

© 2025 Jost

Part assemblies Valve STM Ergo Live3 OC

PartNo	Pos	Qty	Name	Specifications
60008343			Valve STM Ergo Live3 OC	
4501263	1	1	Seal kit	ErgoDrive LCS
60008696	2	1 PCS	Top cap	(10570080)
10570079	3	1 PCS	Spool control	
10570082	4	1 PCS	Cap LH	
10570081	5	1 PCS	Cap RH	
10570071	6	2	Check valve cpl.	Part is included in kit 10570154 Valve STM Professional Live3 OC
10570069	7	2	Check valve cpl.	Part is included in kit 10570154 Valve STM Professional Live3 OC
10570096	8	1	Cap w. marking	Part is included in kit 10570154 Valve STM Professional Live3 OC, Part is included in kit 10570154 Valve STM Professional Live3 OC
5034232	9	1	Cover	Replaces 5033905
10570072	10	1	Pressure relief valve	Part is included in kit 10570154 Valve STM Professional Live3 OC
10570097	11	1 PCS	Shunt OC cpl.	Part is included in kit 10570154 Valve STM Professional Live3 OC
4501272	11b	1	• Spring	
5028087	14	1	Adapter long cpl.	
10570088	15	1	Cover plate	
4500294	16	4	Coupling (M)	Replaces 5044956/60017561
10570087	17	1	Adapter Multi coupling	
10570135	18	1 PCS	Check valve	Part is included in kit 10570154 Valve STM Professional Live3 OC
10570188	19	1 PCS	Cartridge	Replaces 10570102, Part is included in kit 10570154 Valve STM Professional Live3 OC
5040064	30	1	Seal kit	
10570096	31	1	Cap w. marking	Part is included in kit 10570154 Valve STM Professional Live3 OC, Part is included in kit 10570154 Valve STM Professional Live3 OC
10570070	32	1 PCS	Check valve cpl.	
10570078	33	1	Adapter Multi coupling	
10570090	34	1 PCS	Cover plate Single 2	
4500294	35	2	Coupling (M)	Replaces 5044956/60017561
4501264	35b	1	• Seal kit	1 seal kit/coupling required
5028090	36	1 PCS	Adapter with sealing	
5028089	37	1 PCS	Adapter with sealing	
5040066	38	1 PCS	Sealing sleeve cpl.	
5040065	39	1 PCS	Sealing sleeve cpl.	
10570074	40	1 PCS	Spool control unit cpl.	
10570075	41	1 PCS	Connecting pipe cpl.	
10570093	42	2	Solenoid	
5034232	43	1	Cover	Replaces 5033905
10570094	44	1	• Cable tie	
5006019	45	3	Screw	8x16 fzb

© 2025 Jost