Quicke

Powergrab™

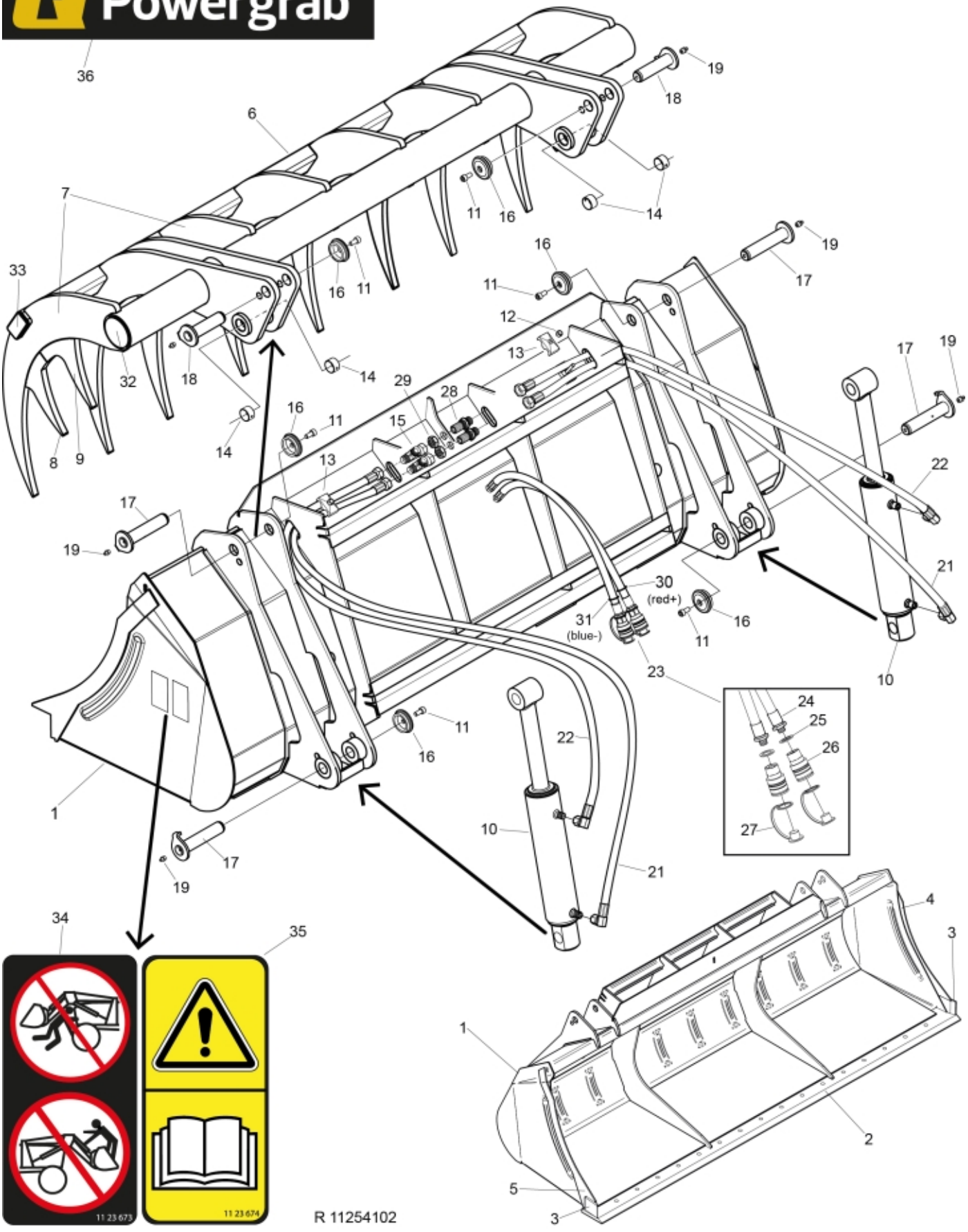

© 2025 Jost

Part assemblies	Powergrab 240 BoH w/o hooks
Specification	Year From: 8/1/2016 12:00:00 AM
	Year To: 12/31/2017 12:00:00 AM

PartNo	Pos	Qty	Name	Specifications
11254102			Powergrab 240 BoH w/o hooks	8/1/2016 12:00:00 AM, 12/31/2017 12:00:00 AM
60013843	1	1 PCS	Bucket 240	Powergrab
60015011	2	1 PCS	• Bolt-on cutting edge	2450mm
11261438	3	2	• Cutting edge	L=80
11261467	4	1 PCS	• Stiffening Plate LH	
11261468	5	1 PCS	• Stiffening Plate RH	
11262096	6	1 PCS	Grab head	Replaces 11261449
11262091	7	4 PCS	• Claw	Replaces 11261455
11262089	8	2 PCS	• Side claw	Replaces 11261433
11262090	9	2 PCS	• Side claw	Replaces 11261443
60119719-1	10	2	Cylinder	1/2/2026 12:00:00 AM
5004917	11	6	Screw	
5011553	12	2	Nut	M6M M8 Loc-king
5016968	13	2	Hose clamp	
5018514	14	4	Bushing	D35 L=20
5028031	15	2	T-Adapter	
5215131	16	6	Locking cover	
9020063	17	4 PCS	Pin	D=35, L=179
9020107	18	2 PCS	Pin	D=35, L=116
5023005	19	6	Greaser	M 10 x 1
9031432	20	1 PCS	Hose kit	
9031495	21	2	• Hose	3/8"
9031499	22	2	• Hose	3/8"
9031565	23	2 PCS	• Hose cpl.	1/2"
9031566	24	1 PCS	•• Hose	1/2"
5013853	25	1	•• Dowty washer	Tredo 1/2", Part is included in kit 60007907 Hose cpl., 9032177 Hose cpl.
5044127	26	1	•• Quick Coupling	1/2", Part is included in kit 60007907 Hose cpl., 9032177 Hose cpl.
5044130	27	1	•• Dust Cover	Part is included in kit 60007907 Hose cpl., 9032177 Hose cpl.
1120159	28	2	Adaptor	
5011757	29	2	Nut	
5022177	30	1	Cable tie	Red
5022179	31	1	Cable tie	Blue
11261471	32	2	Plastic cover	
11261472	33	2 PCS	Plastic cover tube	
1123673	34	1	Warning decal	
1123674	35	1	Warning decal	"Read manual"
11137143	36	1 PCS	Decal	Powergrab

© 2025 Jost