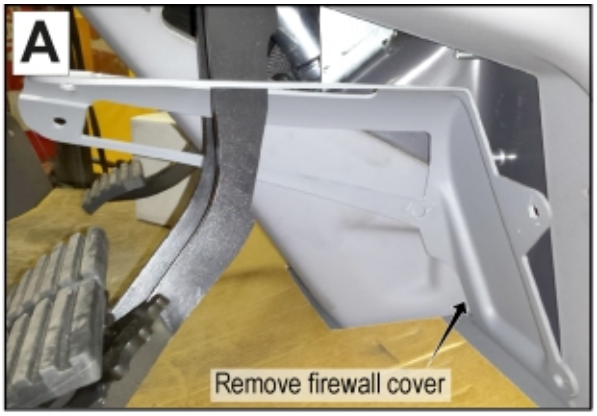

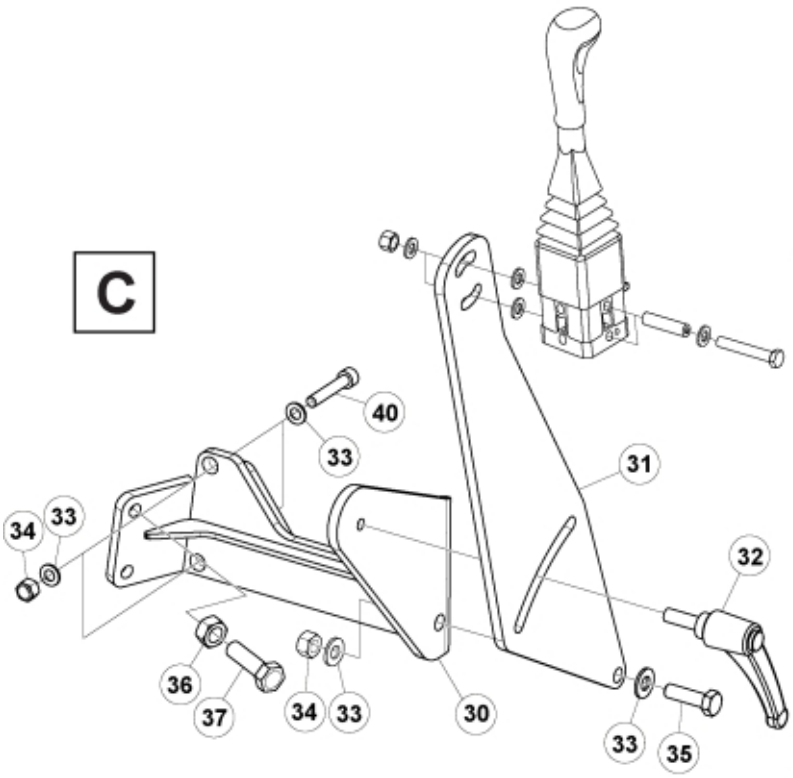

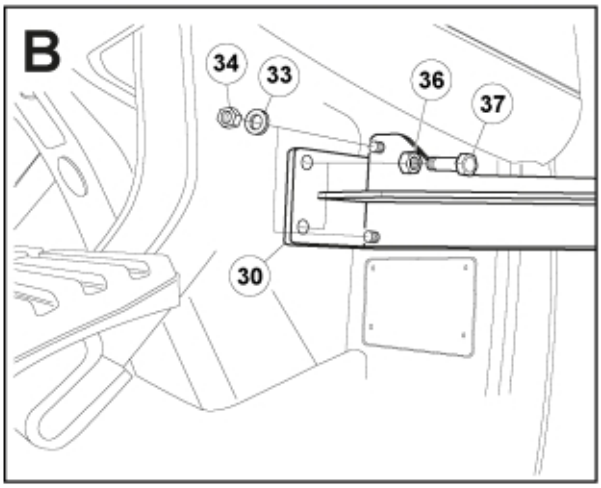

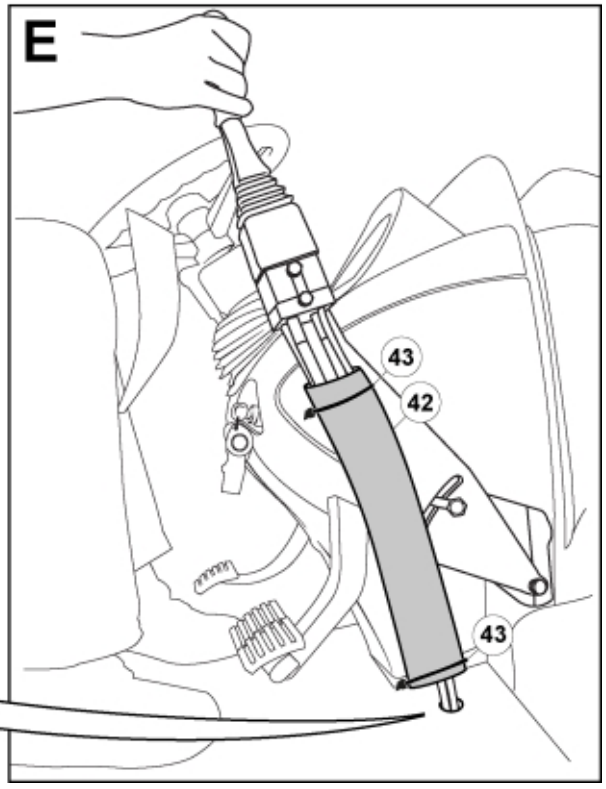

M 60015887

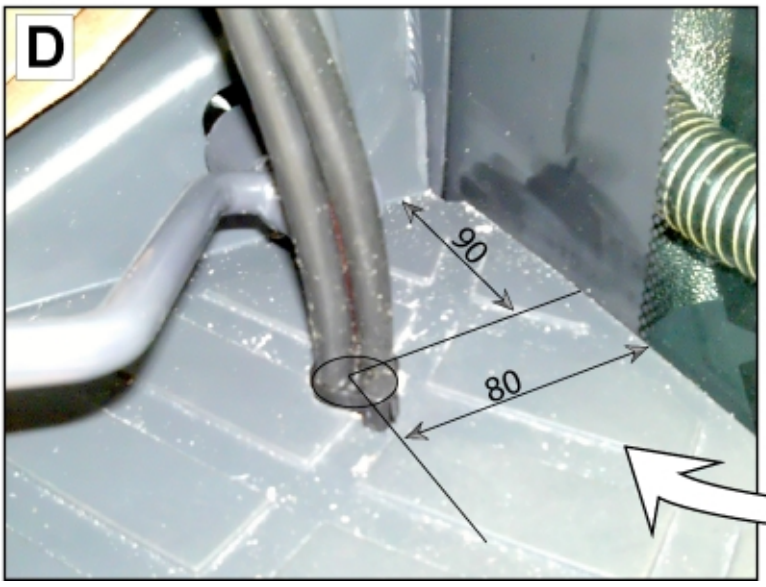

© 2025 Jost

Part assemblies Joystick bracket

PartNo	Pos	Qty	Name	Specifications
60015877		1 PCS	Joystick bracket	
60012894	30	1 PCS	Bracket	
336936	31	1 PCS	Bracket	
5022133	32	1	Knob	
5013110	33	6	Washer	BRB 10.5x22x2
5011554	34	3	Nut	Loc-King M10
5002084	35	1	Screw	M6S 10 x 35
5011055	36	2	Nut	M6M M12
5002104	37	2	Screw	M6S M12X40 (8.8)
5050004	40	2	Screw	M6S M10x45
5050070	42	1	Protection sleeve	
1902101	43	4	Cable tie	

© 2025 Jost