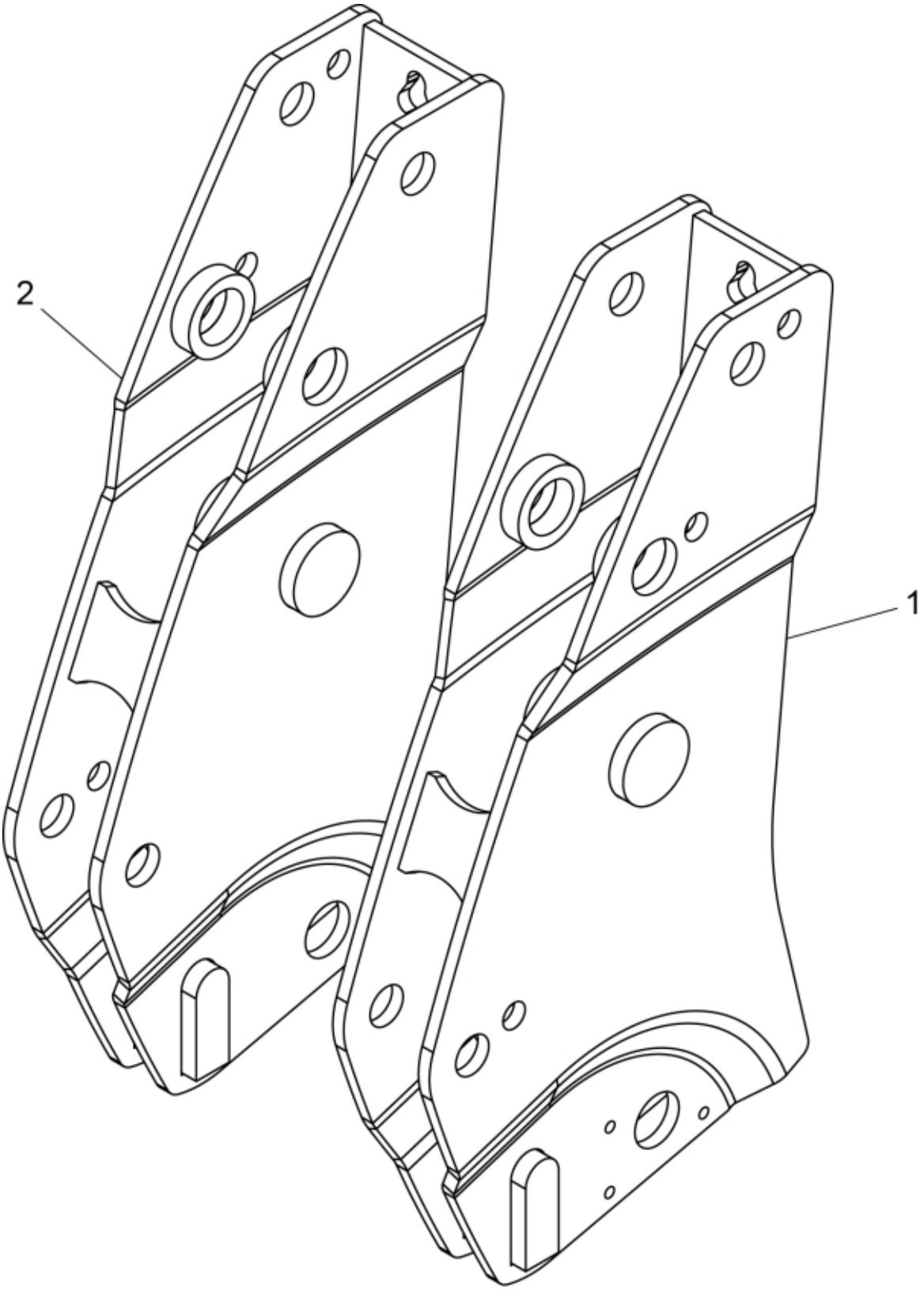

© 2025 Jost

Description	MSL
Part assemblies	Bearing box
Specification	Specification: Black Texture

PartNo	Pos	Qty	Name	Specifications
60004468-17	1	1 PCS	Bearing box LH	Black Texture
60004577-17	2	1 PCS	Bearing box RH	Black Texture

© 2025 Jost