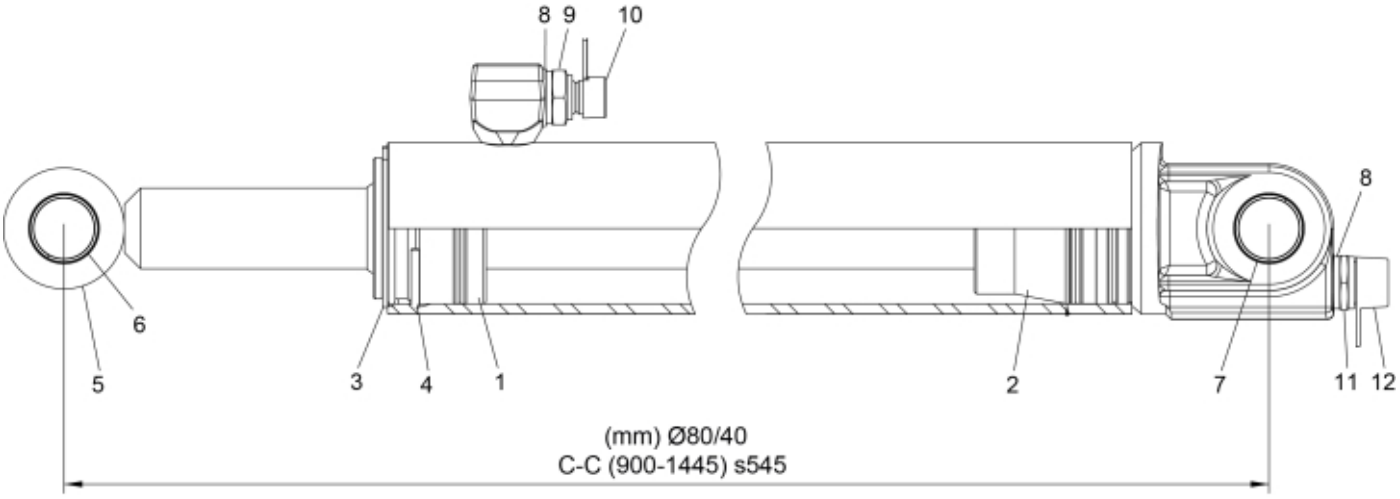
8
9
10
6
5
3
4
1
2
8
7
11
12
(mm) Ø80/40
C-C (900-1445) s545

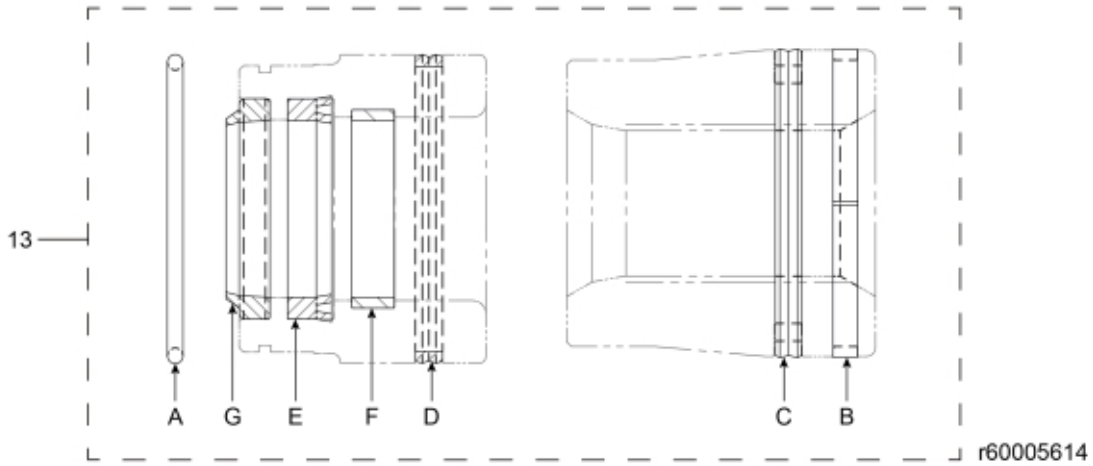
13
A
G
E
F
D
C
B
r60005614

© 2025 Jost

Description	80/40
Part assemblies	Lift Cylinder
Specification	Specification: Glossy Black

PartNo	Pos	Qty	Name	Specifications
12708011	1	1	Bearing	D80/40
12708012	2	1	Piston	D80
5016620	3	1	Retaining ring	
5016667	4	1	Retaining ring	
60107838	5	1	Piston rod cpl.	
5018515	6	2	• Bushing	D30 L=20
5018515	7	2	Bushing	D30 L=20
5013853	8	2	Dowty washer	Tredo 1/2", Part is included in kit 60007907 Hose cpl., 9032177 Hose cpl.
1120011	9	1	Adaptor	R1/2"-R3/8"
5026637	10	1	Plug	
1120012	11	1	Adaptor	G 1/2"
60011412	12	1	Plug	R1/2"
5033706	13	1	Seal kit	
5037241	A	1	• O-ring	72,62 x 3,53
5040015	B	1	• Guide ring	80/75 x 5,5
5040025	C	1	• Piston seal	80/64,5 x 6,3
5039005	D	1	• Cover seal	80 x 73,6 x 6,4
5038254	E	1	• Seal	40/50x10
5040010	F	1	• Guide ring	40/45x9,7
5038101	G	1	• Wiper	40/50x7/10

© 2025 Jost