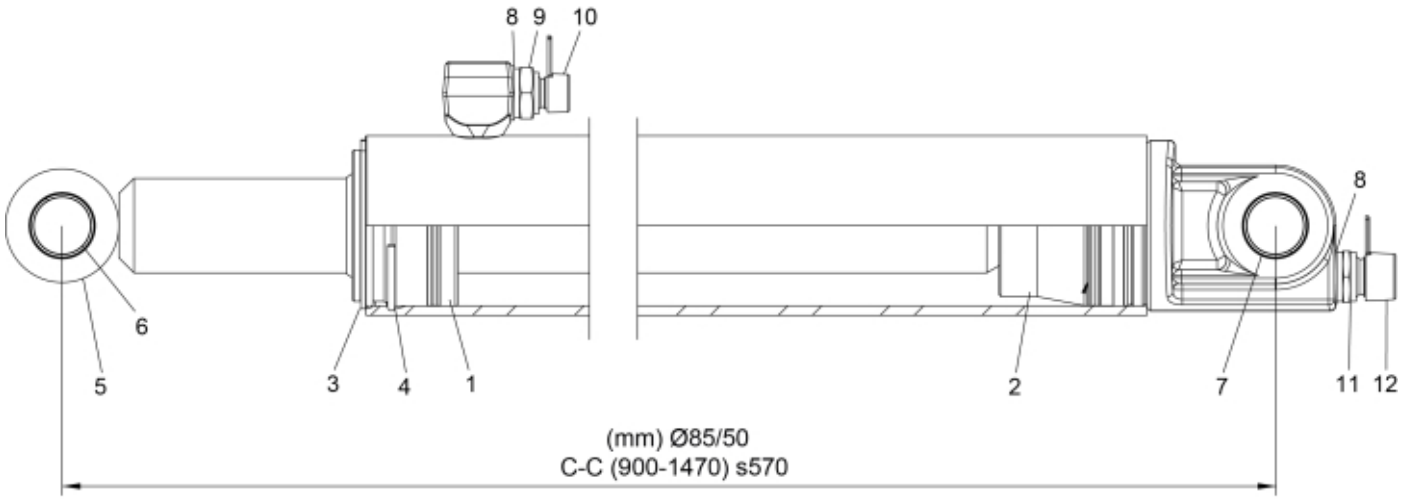
8
9
10
8
6
5
3
4
1
2
7
11
12
(mm) Ø85/50
C-C (900-1470) s570

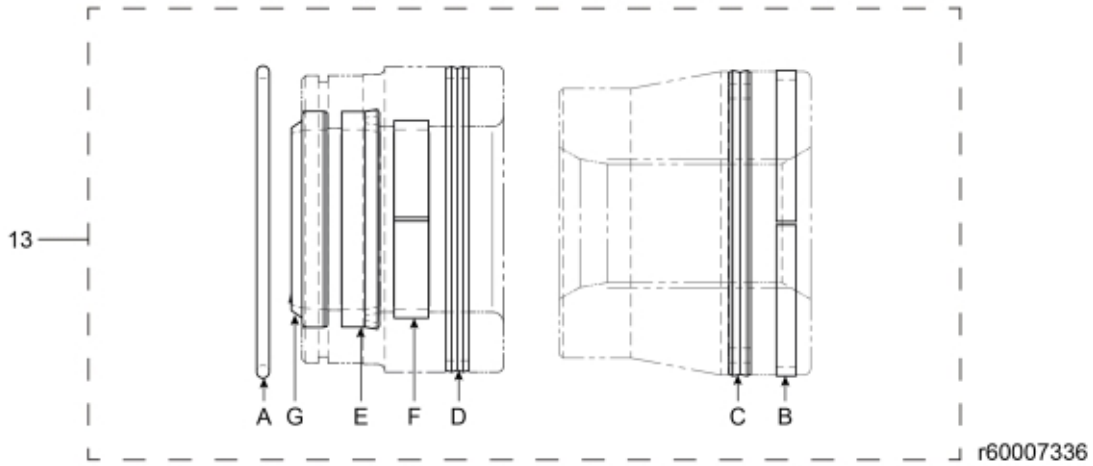
13
A
G
E
F
D
C
B
r60007336

© 2025 Jost

Description	85/50
Part assemblies	Lift Cylinder
Specification	Specification: Glossy Black

PartNo	Pos	Qty	Name	Specifications
12708611	1	1	Bearing	
12708512	2	1	Piston	D85
5016623	3	1	Retaining ring	
5016672	4	1	Retaining ring	
60107840	5	1	Piston rod cpl.	
5018514	6	2	• Bushing	D35 L=20
5018514	7	2	Bushing	D35 L=20
5013853	8	2	Dowty washer	Tredo 1/2", Part is included in kit 60007907 Hose cpl., 9032177 Hose cpl.
1120011	9	2	Adaptor	R1/2"-R3/8"
5026637	10	2	Plug	
1120012	11	1	Adaptor	G 1/2"
60011412	12	1	Plug	R1/2"
5033771	13	1	Seal kit	D85/50
5037249	A	1	• O-ring	NBR 70Sh
5040016	B	1	• Guide ring	85/80x5.5
5040026	C	1	• Piston seal	85/69.5x6.3
5039006	D	1	• Seal kit	85 x 78.6 x 6.4
5038256	E	1	• Seal	50/60 x 10
5040011	F	1	• Guide ring	50/55 x 9,7
5038104	G	1	• Wiper	50/60 x 7/10

© 2025 Jost