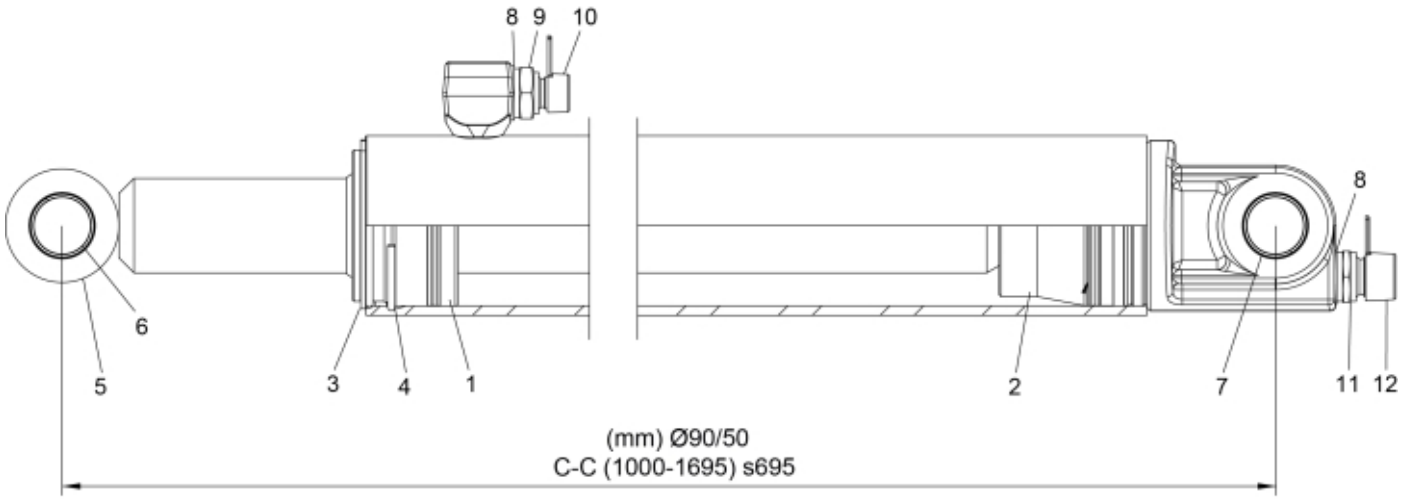
8
9
10
8
6
5
3
4
1
2
7
11
12
(mm) Ø90/50
C-C (1000-1695) s695

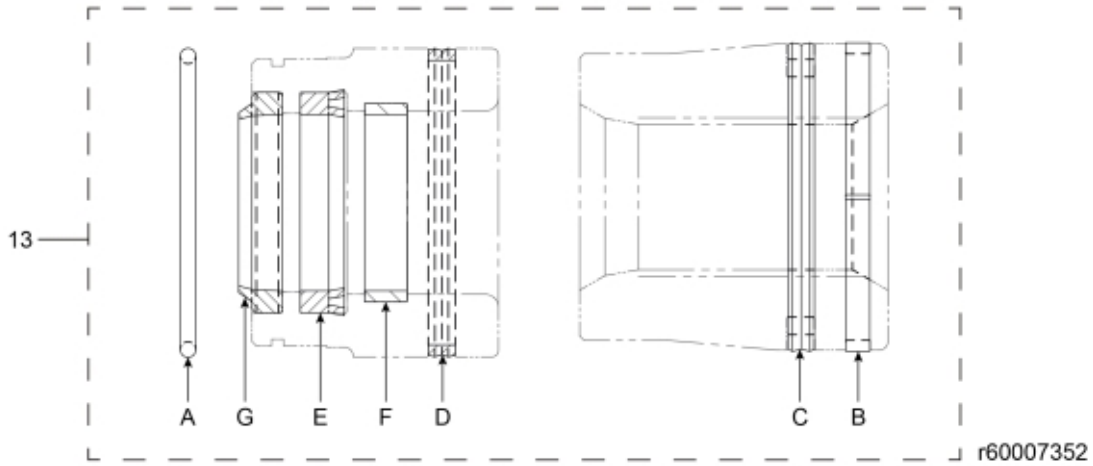
13
A
G
E
F
D
C
B
r60007352

© 2025 Jost

Description	90/50
Part assemblies	Lift Cylinder
Specification	Specification: Glossy Black

PartNo	Pos	Qty	Name	Specifications
12709111	1	1	Bearing	
12709012	2	1	Piston	
5016619	3	1	Retaining ring	
5016666	4	1	Retaining ring	
12712123	5	1	Piston rod cpl.	
5018514	6	2	• Bushing	D35 L=20
5018514	7	2	Bushing	D35 L=20
5013853	8	2	Dowty washer	Tredo 1/2", Part is included in kit 60007907 Hose cpl., 9032177 Hose cpl.
1120011	9	2	Adaptor	R1/2"-R3/8"
5026637	10	2	Plug	
1120012	11	1	Adaptor	G 1/2"
60011412	12	1	Plug	R1/2"
5033709	13	1	Seal kit	
5037240	A	1	• O-ring	82,14 x 3,53
5040017	B	1	• Guide ring	90/85 x 5,5
5040027	C	1	• Piston seal	90/74,5 x 6,3
5039007	D	1	• Cover seal	90 x 83 x 6,5
5038256	E	1	• Seal	50/60 x 10
5040011	F	1	• Guide ring	50/55 x 9,7
5038104	G	1	• Wiper	50/60 x 7/10

© 2025 Jost