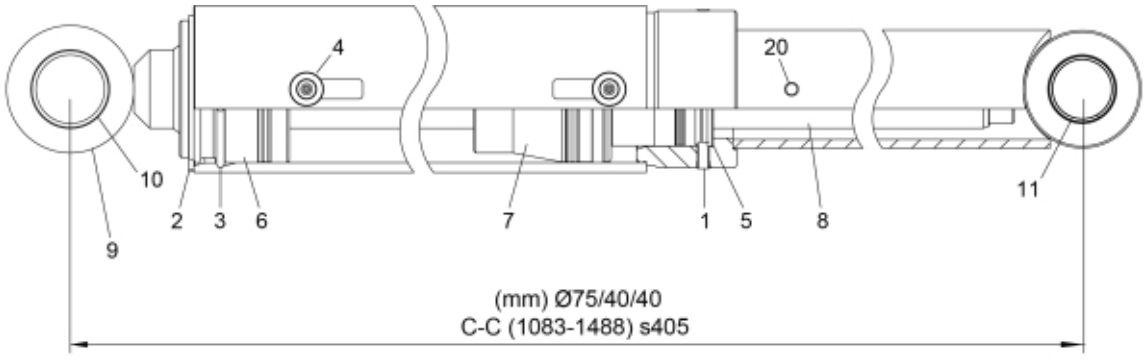
4
20
10
2
3
6
7
1
5
8
11
9
(mm) Ø75/40/40
C-C (1083-1488) s405

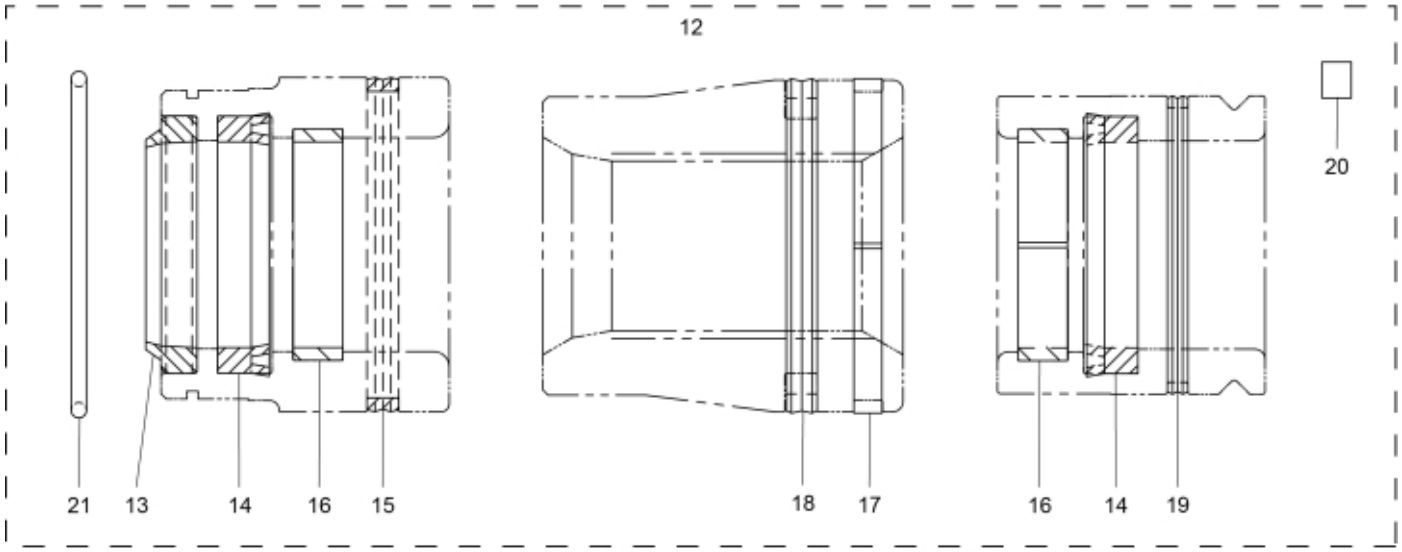
12
20
21
13
14
16
15
18
17
16
14
19
r60019003

© 2025 Jost

Description	75/40/40
Part assemblies	Tilt Cylinder
Specification	Specification: Glossy Black

PartNo	Pos	Qty	Name	Specifications
5005983	1	2	Stop screw	S6SS M6x16
5016618	2	1	Retaining ring	
5016665	3	1	Retaining ring	
5026637	4	2	Plug	
12700017	5	1	Guide	
12707511	6	1	Bearing	D75/40
12707512	7	1	Piston	D75
12714715	8	1 PCS	Rear rod	
60107833	9	1	Piston rod cpl.	
5018514	10	2	• Bushing	D35 L=20
5018515	11	2	Bushing	D30 L=20
5033713	12	1	Seal kit	
5038101	13	1	• Wiper	40/50x7/10
5038254	14	2	• Seal	40/50x10
5039004	15	1	• Cover seal	75 x 69.6 x 6.2
5040010	16	2	• Guide ring	40/45x9,7
5040014	17	1	• Guide ring	75/70x5.5
5040024	18	1	• Piston seal	75/59.5x6.3
5039001	19	1	• Seal kit	58 x 53.4 x 4.1
5022095	20	1	• Plug	
5037239	21	1	• O-ring	68.26x3x53

© 2025 Jost