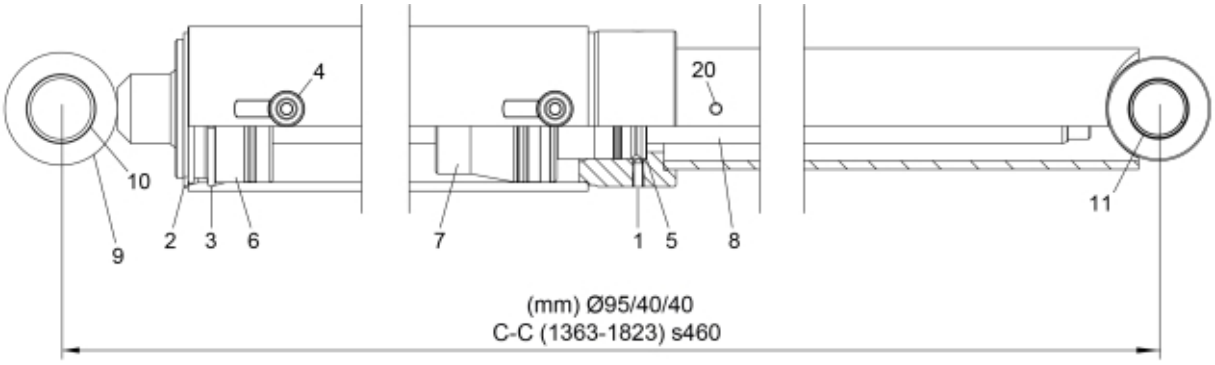

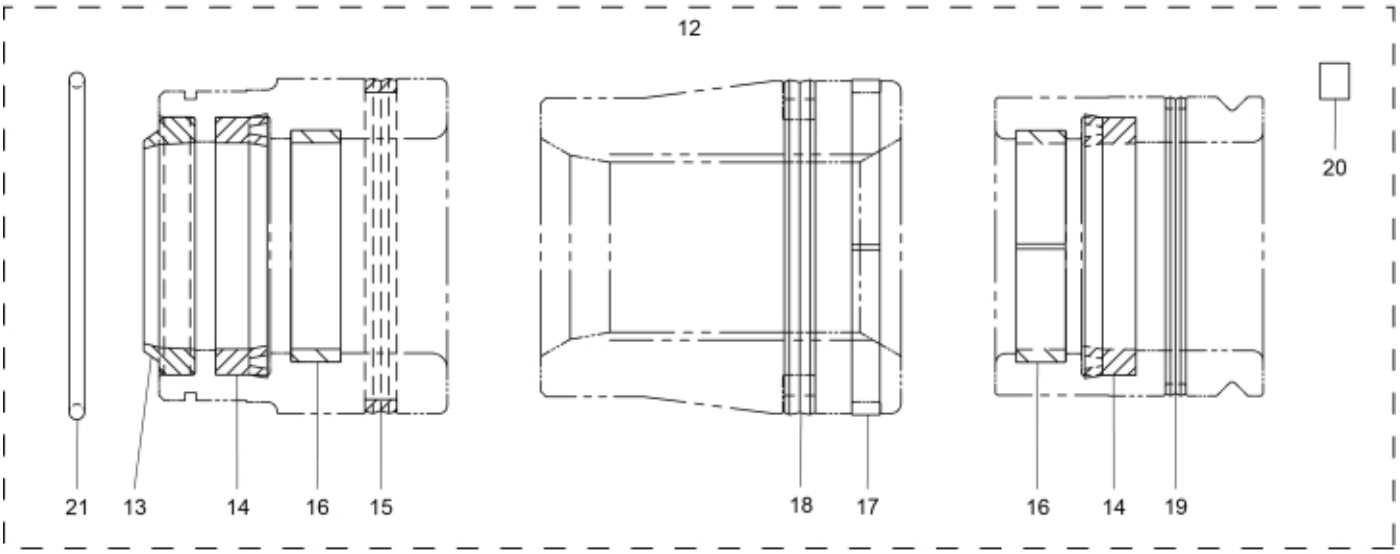

r60007604

© 2025 Jost

Description	95/40/40
Part assemblies	Tilt Cylinder
Specification	Specification: Glossy Black

PartNo	Pos	Qty	Name	Specifications
5005983	1	2	Stop screw	S6SS M6x16
5040069	2	1	Retaining ring	
5040070	3	1	Retaining ring	
5026637	4	2	Plug	
12700017	5	1	Guide	
12721111	6	1 PCS	Bearing	
12720112	7	1	Piston	
12700915	8	1	Rear rod	
12714323	9	1	Piston rod cpl.	
5018513	10	2	• Bushing	D40 L=20
5018514	11	2	Bushing	D35 L=20
5034159	12	1	Seal kit	
5038101	13	1	• Wiper	40/50x7/10
5038254	14	2	• Seal	40/50x10
5040068	15	1	• Seal kit	95x88.8x6.9
5040010	16	2	• Guide ring	40/45x9,7
5040078	17	1	• Guide ring	95/5.5x2.5
5040079	18	1	• Piston seal	D95
5039001	19	1	• Seal kit	58 x 53.4 x 4.1
5022095	20	1	• Plug	
5039033	21	1 PCS	• O-ring	78.3x85.3x3.53

© 2025 Jost