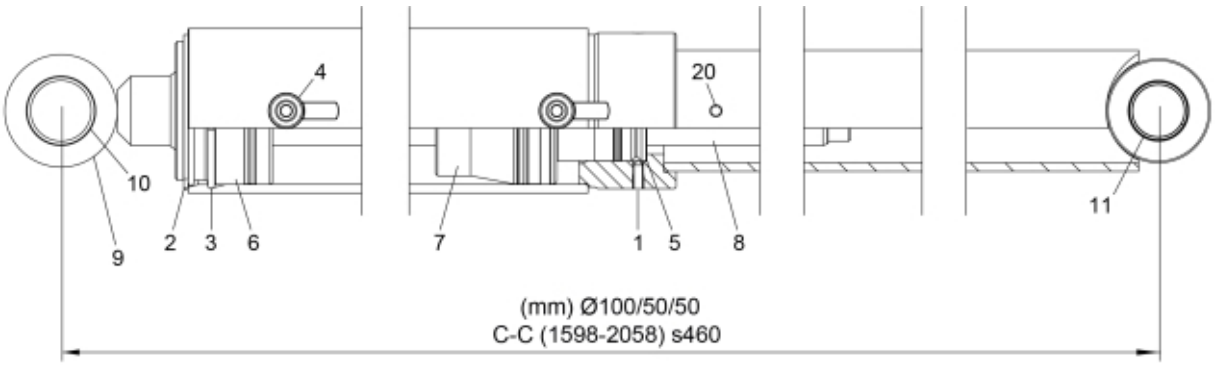
4
20
10
9
2
3
6
7
1
5
8
11
(mm) Ø100/50/50
C-C (1598-2058) s460

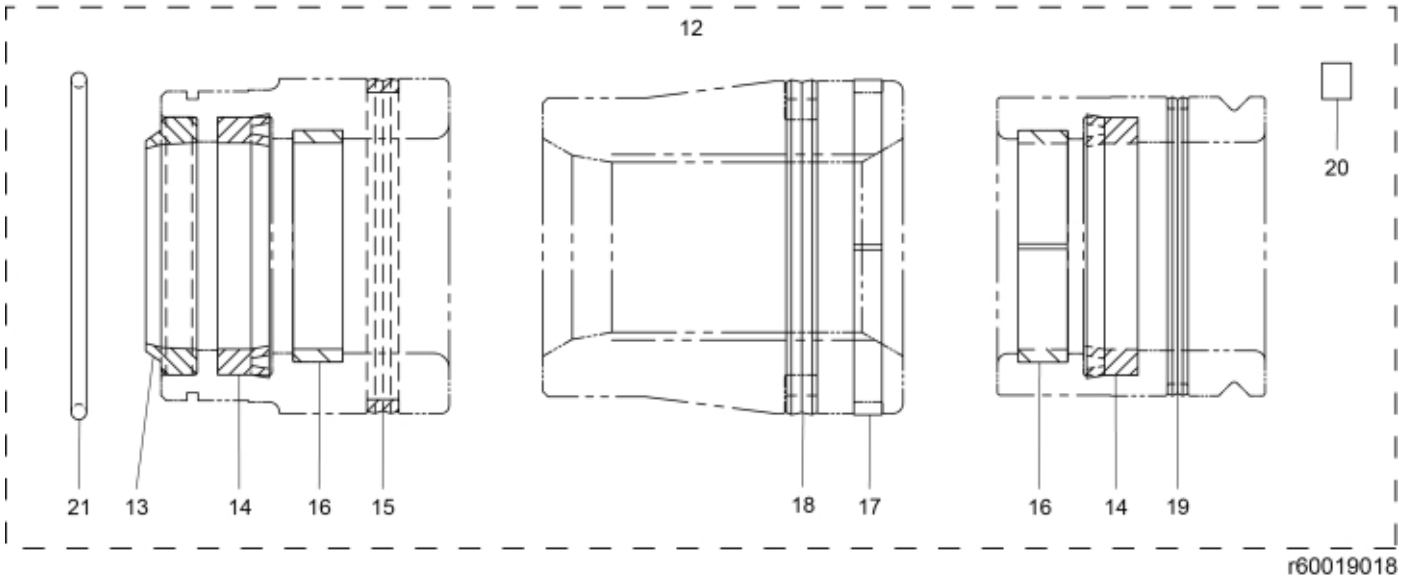
12
20
21
13
14
16
15
18
17
16
14
19
r60019018

© 2025 Jost

Description	100/50/50
Part assemblies	Tilt Cylinder
Specification	Specification: Glossy Black

PartNo	Pos	Qty	Name	Specifications
5005983	1	2	Stop screw	S6SS M6x16
5016624	2	1	Retaining ring	
5016677	3	1	Retaining ring	
5026637	4	2	Plug	
12700317	5	1 PCS	Guide	
12710011	6	1 PCS	Bearing	
12710012	7	1	Piston	
12700022	8	1 PCS	Rear rod	
12715923	9	1	Piston rod cpl.	
5018513	10	2	• Bushing	D40 L=20
5018514	11	2	Bushing	D35 L=20
5040071	12	1	Seal kit	100/50/50
5038104	13	1	• Wiper	50/60 x 7/10
5038256	14	2	• Seal	50/60 x 10
5039008	15	1	• Seal kit	100 x 93,8 x 6,9
5040011	16	2	• Guide ring	50/55 x 9,7
5040018	17	1	• Guide ring	100/95 x 5,5
5040028	18	1	• Piston seal	100/84,5 x 6,3
5039003	19	1	• Cover seal	70 x 64,6 x 6,2
5022095	20	1	• Plug	
5037265	21	1	• O-ring	91,6 x 3,53

© 2025 Jost