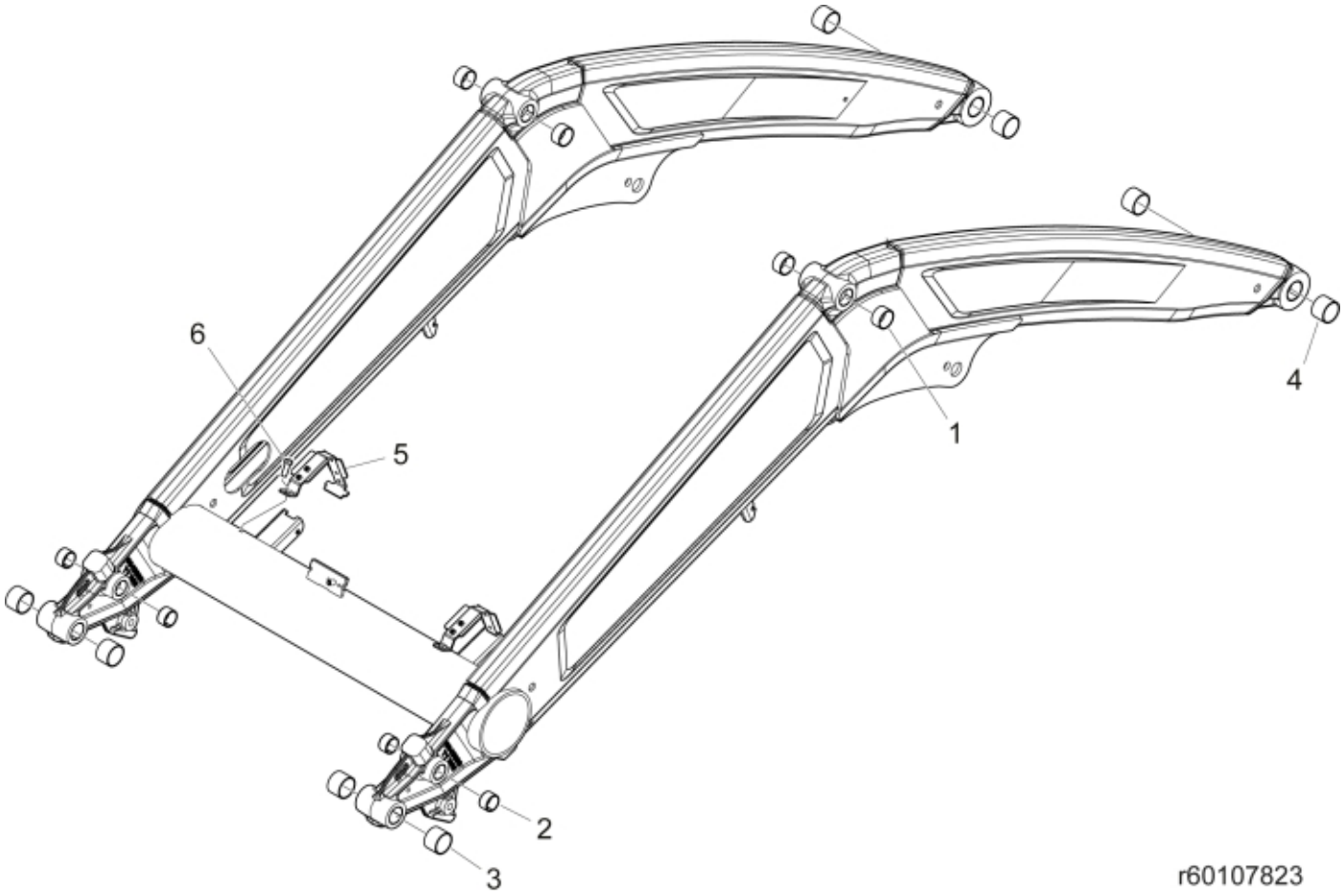



© 2025 Jost

| | |
|---|---|
| **Part assemblies** | Loader beam w. bushings |
| **Specification** | Specification: Black Texture |

| PartNo | Pos | Qty | Name | Specifications |
|---|---|---|---|---|
| 5018513 | 1 | 4 | Bushing | D40 L=20 |
| 5018514 | 2 | 4 | Bushing | D35 L=20 |
| 5018904 | 3 | 4 | Bushing | D40 L=30 |
| 60004007 | 4 | 4 | Bushing | D45 L=30 |
| 60070968 | 5 | 2 | Hose guide | |
| 5002077 | 6 | 2 | Screw | M6S 10x30 |


© 2025 Jost