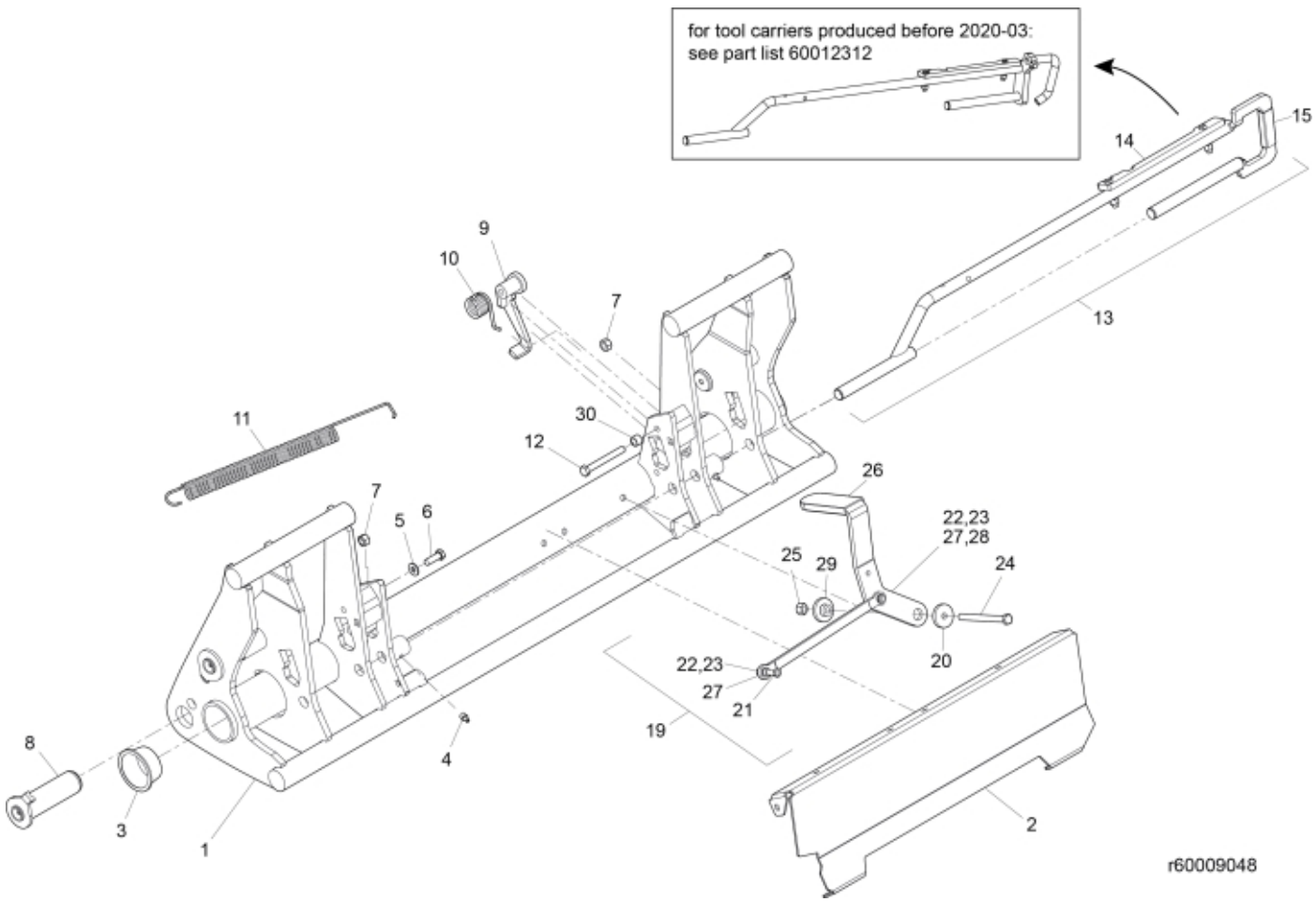
for tool carriers produced before 2020-03:
see part list 60012312
15
14
13
9
10
7
11
30
12
26
7
5
6
22,23
27,28
25
29
24
20
22,23
27
21
19
8
3
1
4
2
r60009048

© 2025 Jost

Description	Tool carrier
Part assemblies	Euro DL
Specification	Specification: Black Texture

PartNo	Pos	Qty	Name	Specifications
60009048-17		1	Euro DL	Black Texture
60078908-17	1	1	Tool carrier	Black Texture
60076610-17	2	1	Cover plate	Black Texture
5221573	3	2	Plastic cover	
5023005	4	2	Greaser	M 10 x 1
5013110	5	1	Washer	BRB 10.5x22x2
5002077	6	1	Screw	M6S 10x30
5011554	7	2	Nut	Loc-King M10
60006415	8	4	Pin	D40 L=134
60009158	9	1	Click-on	
5051511	10	1	Spring	
60010817	11	1	Spring	
5002991	12	1	Screw	M6S_M10x90 (8.8)
4501169	13	1	Locking mechanism cpl.	
60013749	14	1	• Guide plate	
60039148	15	1	• Plastic handle	
60013803	19	1	Locking mechanism cpl.	
60009693	20	1	• Plate	
5002055	21	1	• Screw	M6S M8x40
5013101	22	2	• Washer	BRB 8,4 x 16
5011553	23	2	• Nut	M6M M8 Loc-king
5002091	24	1	• Screw	M6S 10x120
5011554	25	1	• Nut	Loc-King M10
5022144	26	1	• Cover	
60038758	27	2	• Spacer	
5002053	28	1	• Screw	M6S 8 x 30
60009557	29	1	• Sleeve	
5219100	30	1	Spacer	

© 2025 Jost