

DM Bearing boxes

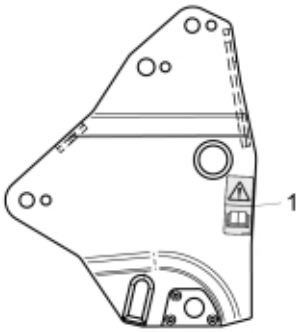

Extended Bearing boxes

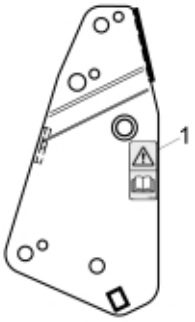

Basic Bearing boxes

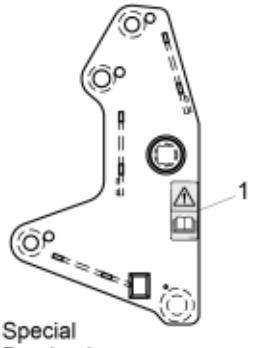

Special
Bearing boxes

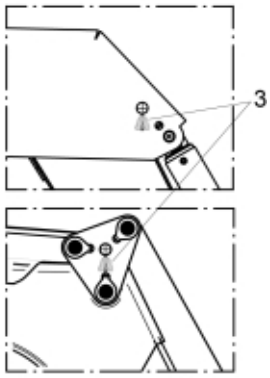

Inside kneeplate and link

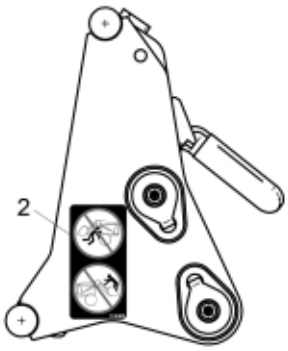

Euro Tool carrier

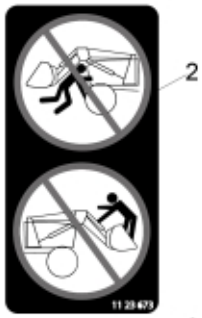

r4500197

© 2025 Jost

Part assemblies Warning decal kit EU

PartNo	Pos	Qty	Name	Specifications
1123674	1	1	Warning decal	"Read manual"
1123673	2	2	Warning decal	
1123676	3	2	Decal, lift	

© 2025 Jost