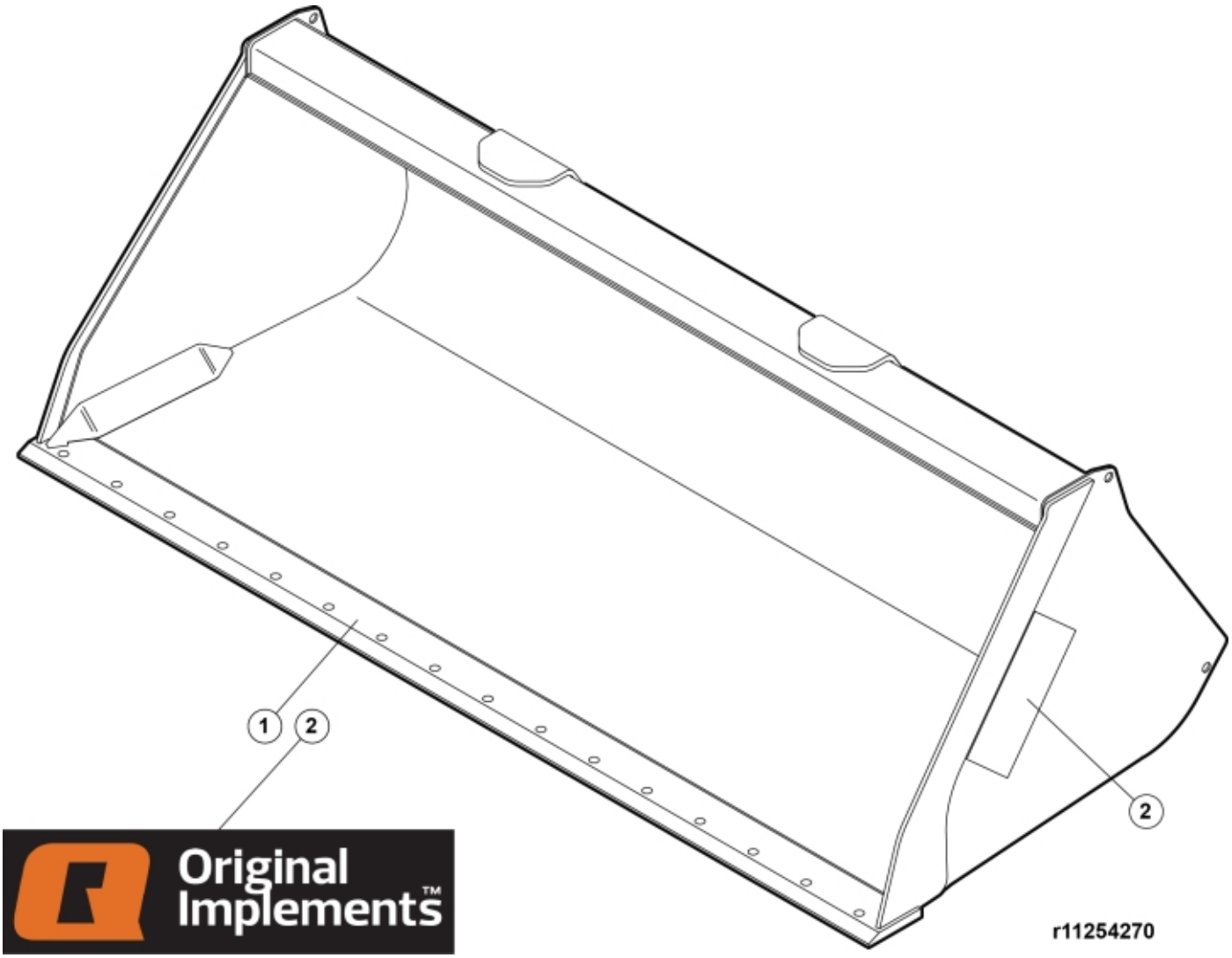

© 2025 Jost

Part assemblies	HDX Bucket 12,24 Euro
Specification	Year From: 1/1/2017 12:00:00 AM

PartNo	Pos	Qty	Name	Specifications
60014627	1	1 PCS	Cutting edge	L=2440
60001650	2	1 PCS	Decal	Original Implements 361,7x100
5022119		2	Plug	

© 2025 Jost