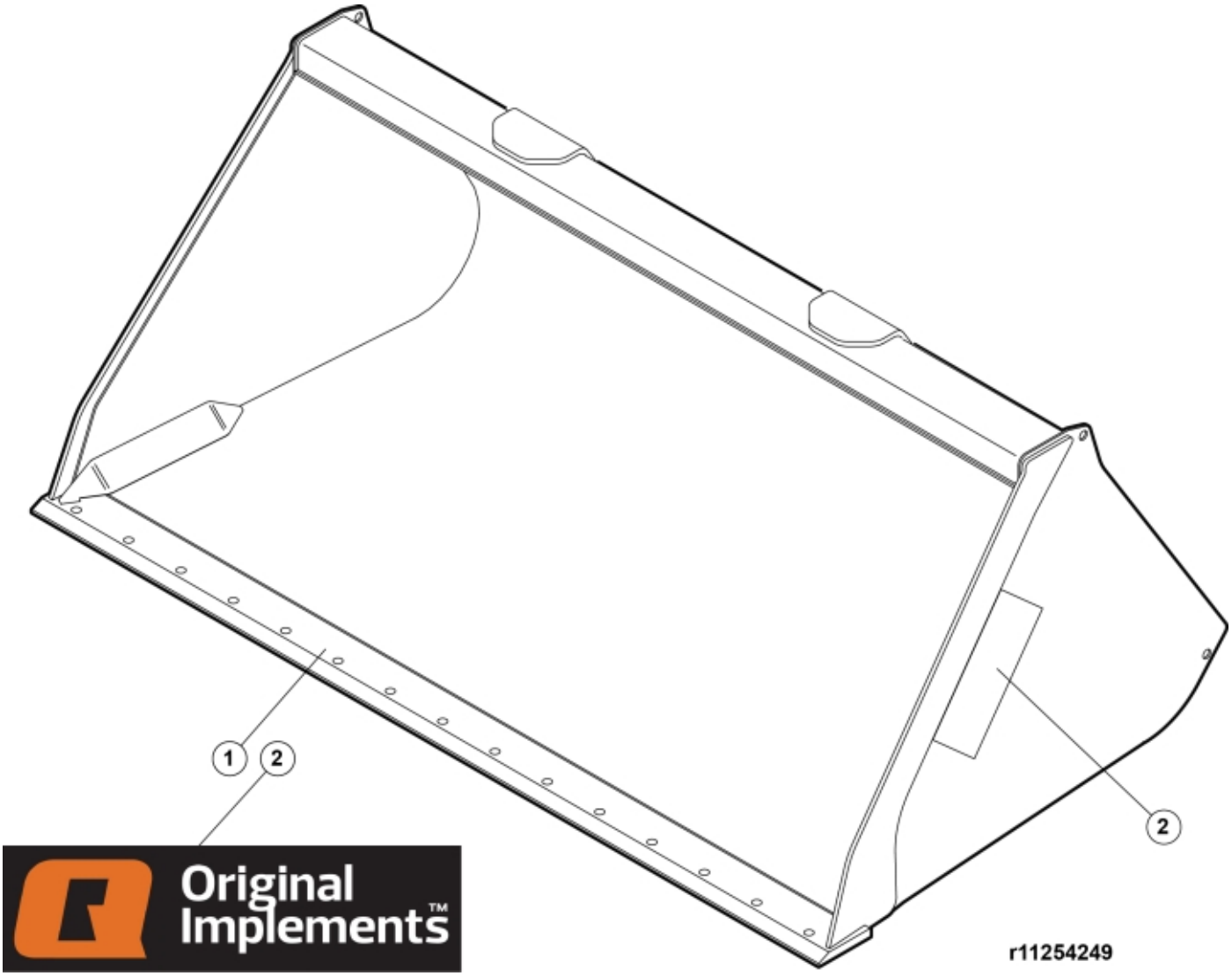



© 2025 Jost

| | |
|---|---|
| **Part assemblies** | HDX Bucket 15,23 Merlo |
| **Specification** | Year From: 1/1/2017 12:00:00 AM |

| PartNo | Pos | Qty | Name | Specifications |
|---|---|---|---|---|
| 60015431 | 1 | 1 PCS | Cutting edge | L=2290 |
| 60001650 | 2 | 1 PCS | Decal | Original Implements 361,7x100 |
| 5022119 | | 2 | Plug | |


© 2025 Jost