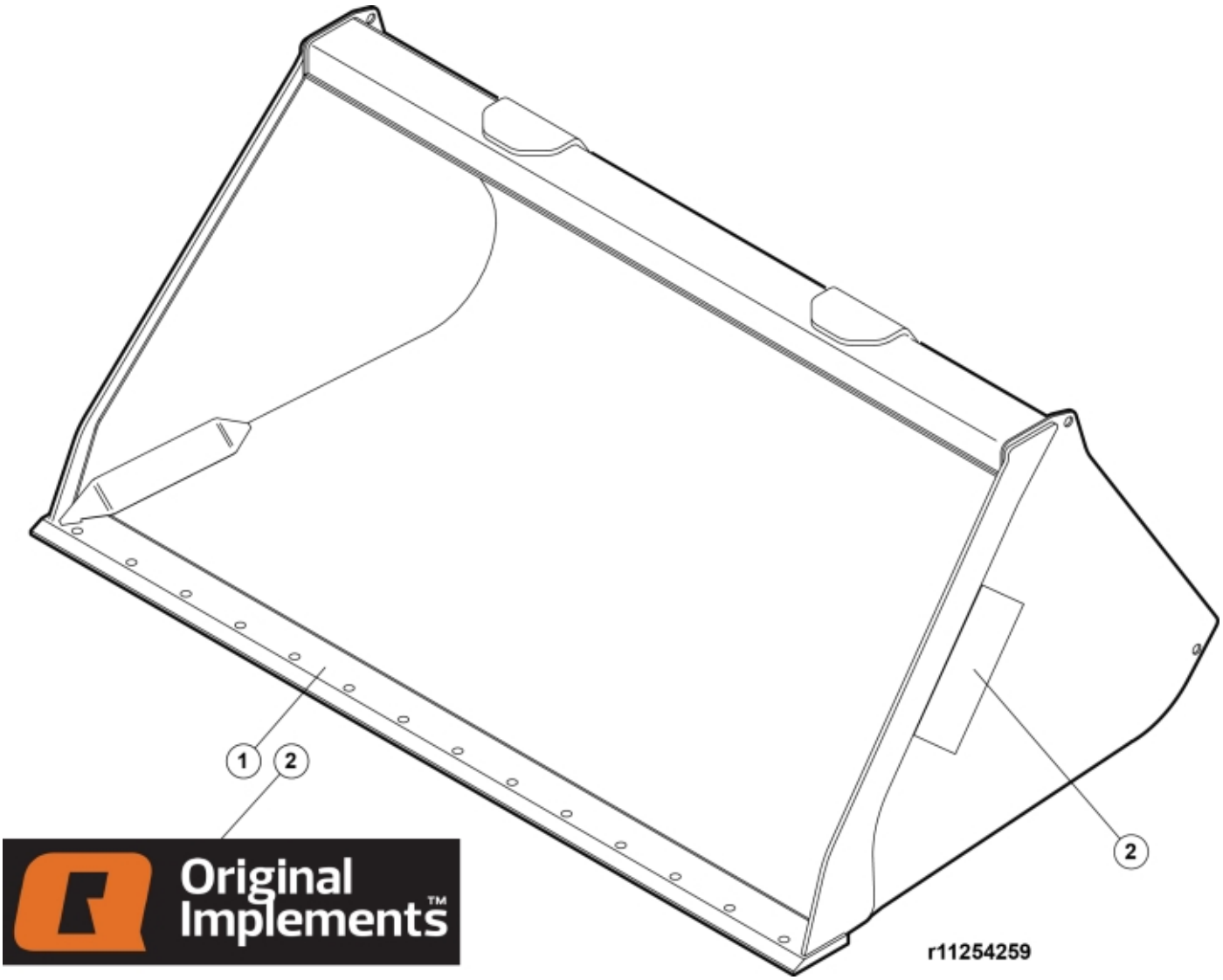

© 2025 Jost

Part assemblies	HDX Bucket 14,21 BM Large
Specification	Year From: 1/1/2017 12:00:00 AM

PartNo	Pos	Qty	Name	Specifications
60015517	1	1 PCS	Cutting edge	L=2135
60001650	2	1 PCS	Decal	Original Implements 361,7x100
5022119		2	Plug	

© 2025 Jost