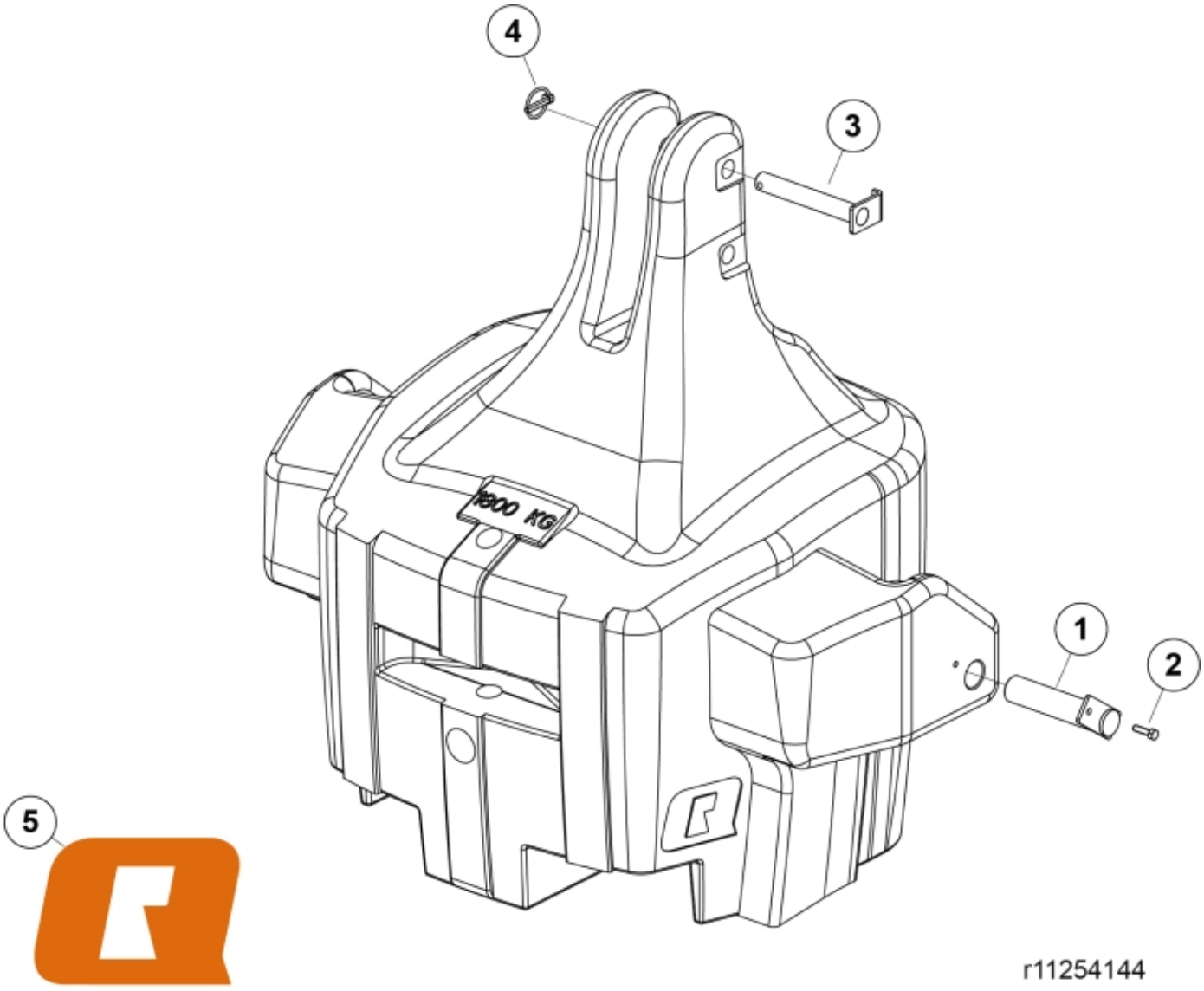

© 2025 Jost

Part assemblies Q-Bloq 1800

PartNo	Pos	Qty	Name	Specifications
11254144		1	Q-Bloq 1800	
60024259	1	2 PCS	Pin	ø36,5
5002053	2	2	Screw	M6S 8 x 30
60024260	3	1 PCS	Pin	
5017002	4	1	Linch pin	
60056616	5	2	Decal	"Q" medium 110mm

© 2025 Jost