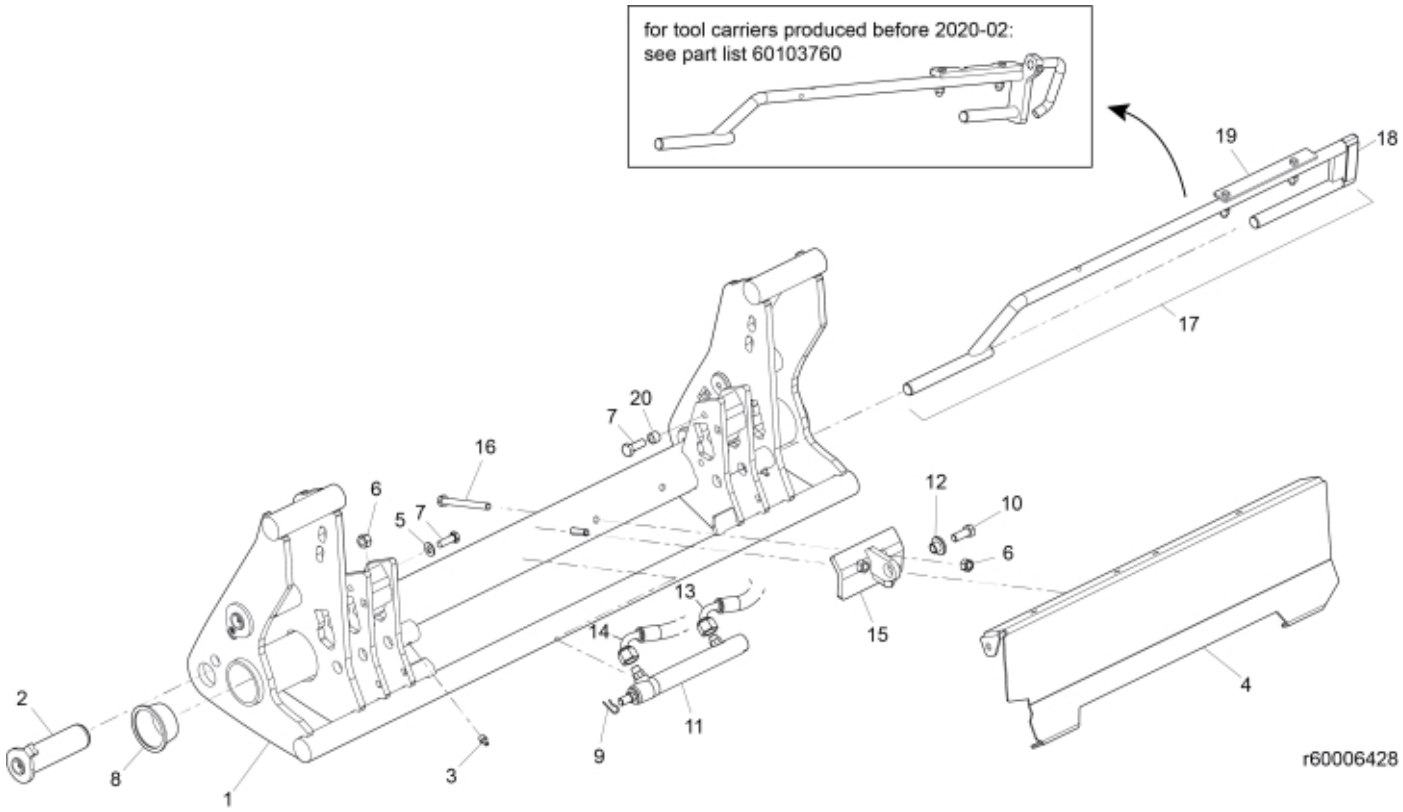
for tool carriers produced before 2020-02:
see part list 60103760
19
18
17
20
7
16
6
5
7
12
10
6
13
14
15
4
2
8
1
3
9
11
r60006428

© 2025 Jost

Description	Tool carrier
Part assemblies	Euro Hydraulic
Specification	Specification: Black Texture

PartNo	Pos	Qty	Name	Specifications
60006428-17		1	Euro Hydraulic	Black Texture
60103752-17	1	1	Tool carrier	Black Texture
60006415	2	4	Pin	D40 L=134
5023005	3	2	Greaser	M 10 x 1
60076610-17	4	1	Cover plate	Black Texture
5013110	5	1	Washer	BRB 10.5x22x2
5011554	6	4	Nut	Loc-King M10
5002077	7	2	Screw	M6S 10x30
5221573	8	2	Plastic cover	
60020459	9	1	Locking Pin	
5002971	10	1	Screw	M6S 10x30 Drilock
60103722	11	1	Cylinder	
60006448	12	1	Sleeve	
60009522	13	1	Hose	1/4" L=1280 1/4G90LM - 1/4GRLM
60009523	14	1	Hose	1/4" L=1430 1/4G90LM - 1/4GRLM
60011993	15	1	Attachment	
5002081	16	2	Screw	M6S M10 x 110 (8.8)
4501178	17	1	Locking mechanism cpl. (DM Hyd)	Euro, Replaces 60012679 and 4501170
60039148	18	1	• Plastic handle	
60048146	19	1	• Guide plate	(60013411)
5219100	20	1	Spacer	

© 2025 Jost