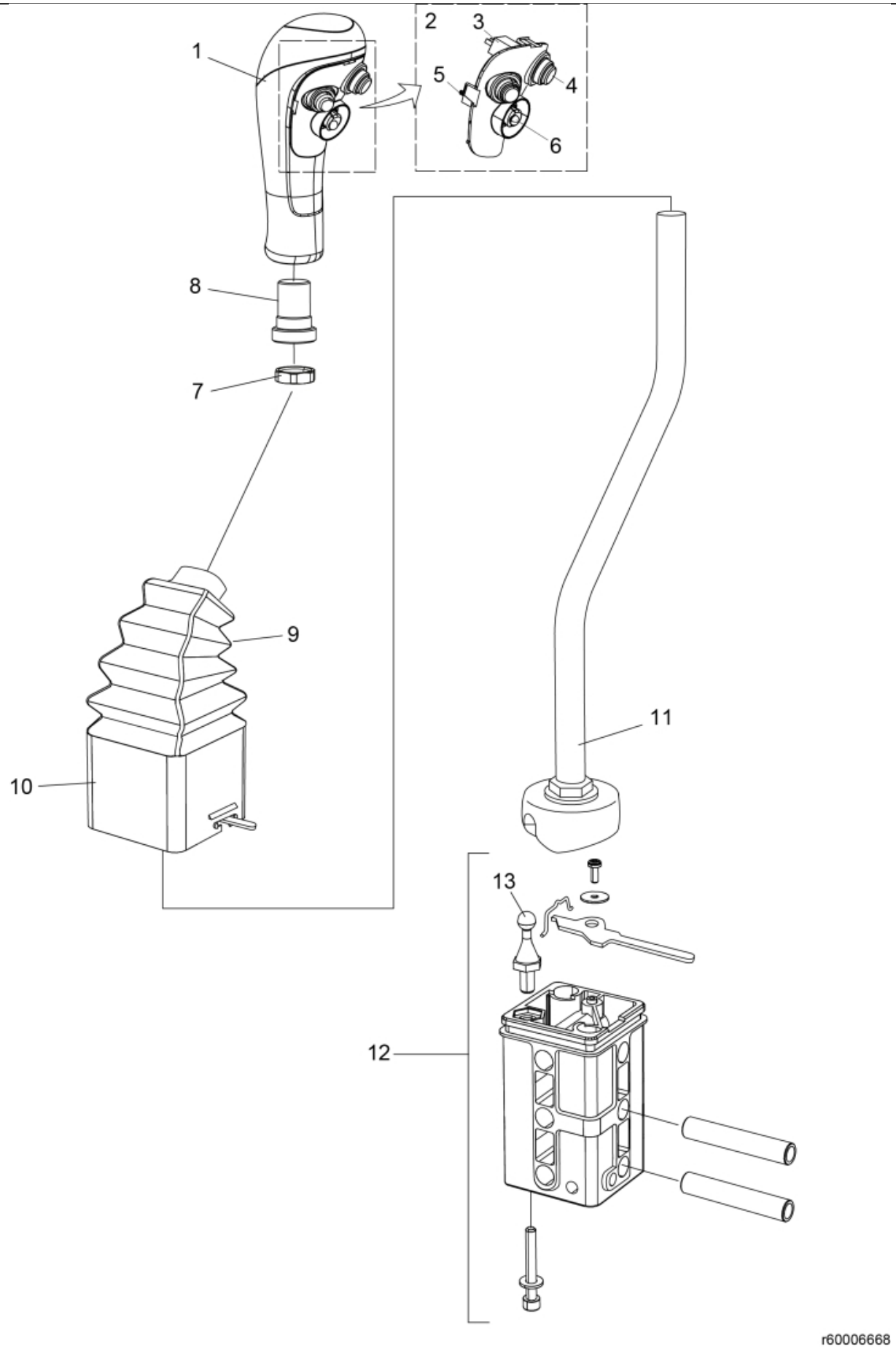

© 2025 Jost

Part assemblies Control lever RH

PartNo	Pos	Qty	Name	Specifications
4500080		1	Control lever RH	
5021100	1	1	• Handle RH	
5020936	2	1	• Insert	3 switches
5024365	3	2	•• Switch	A 294813
5024366	4	2	•• Boot	A 294814
4500354	5	1	•• Switch	
4500355	6	1	•• Gaitor	
4500351	7	1	• Nut	
4500404	8	1	• Adaptor	M14/M18
5020337	9	1	• Gaiter	
4500402	10	1	• Collar	
4500396	11	1	• Lever cpl.	
4500397	12	1	• Housing cpl.	
4500400	13	1	•• Pivot	

© 2025 Jost