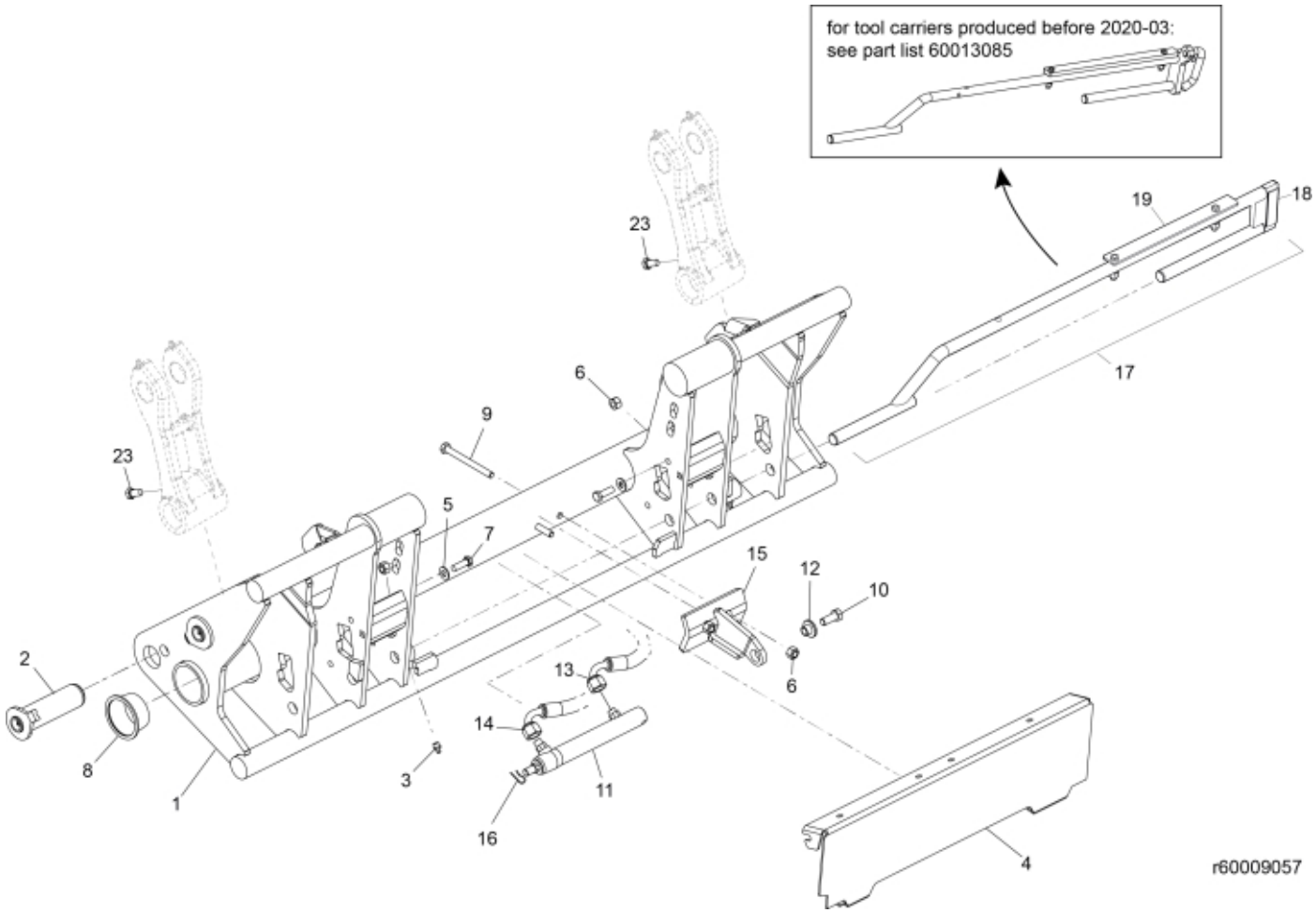
for tool carriers produced before 2020-03:
see part list 60013085
r60009057

© 2025 Jost

Description	Tool carrier
Part assemblies	Euro/SMS DL Hydraulic
Specification	Specification: Black Texture
	Year To: 3/14/2021 12:00:00 AM

PartNo	Pos	Qty	Name	Specifications
60009057-17		1 PCS	Euro/SMS DL Hydraulic	Black Texture, 3/14/2021 12:00:00 AM
60009053-17	1	1 PCS	Tool carrier	Black Texture
60006415	2	4	Pin	D40 L=134
5023005	3	2	Greaser	M 10 x 1
60006671-17	4	1 PCS	Cover plate	Black Texture
5013110	5	2	Washer	BRB 10.5x22x2
5011554	6	4	Nut	Loc-King M10
5002077	7	2	Screw	M6S 10x30
5221573	8	2	Plastic cover	
5002081	9	1	Screw	M6S M10 x 110 (8.8)
5002971	10	1	Screw	M6S 10x30 Drilock
60103722	11	1	Cylinder	
60006448	12	1	Sleeve	
60018858	13	1	Hose	1/4" L=1430 1/4G90LM - 1/4GRLM
60018856	14	1	Hose	1/4" L=1590 1/4G90LM - 1/4GRLM
60012213	15	1	Attachment	
60020459	16	2	Locking Pin	
4501175	17	1	Locking mechanism cpl. (DL Hyd)	Replaces 60013275 and 4501165
60039148	18	1	• Plastic handle	
60048150	19	1 PCS	• Guide plate	Replaces 60013927
5002172	23	2	Screw	M6S M16x20

© 2025 Jost