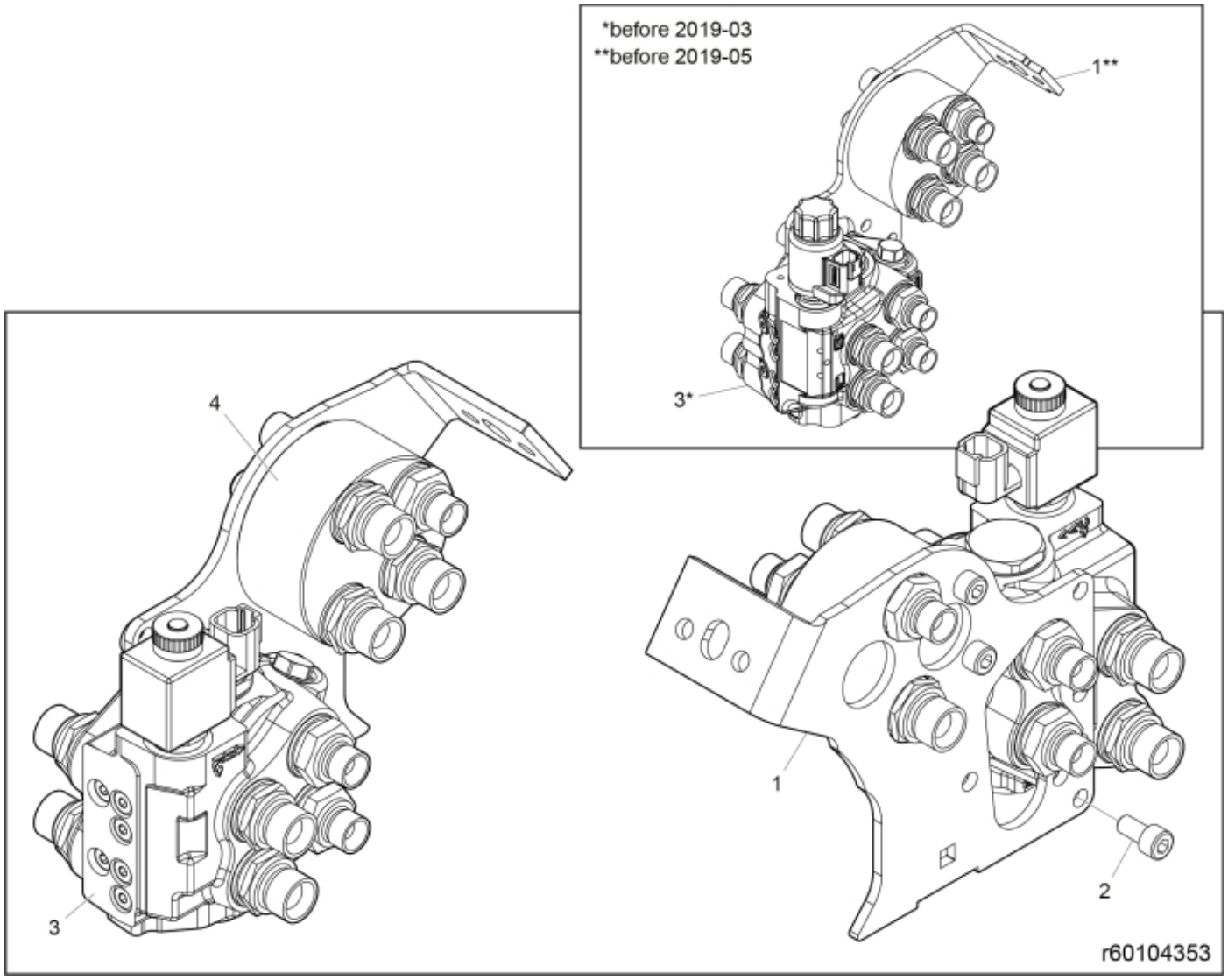

© 2025 Jost

Part assemblies CVU 3rd service

PartNo	Pos	Qty	Name	Specifications
4500262		1	CVU 3rd service	
60037851	1	1	• Bracket	(2019/05-)
60107381	1**	1	• Bracket	(-2019/05)
5050342	2	4	• Screw	MC6S M8x14 (8.8)
4501092	3	1	• Block cpl	3rd service, Replaces 4500105, 3/1/2019 12:00:00 AM (2019/03-)
4500105	3*	1	• Block cpl	3rd service, 2/28/2019 12:00:00 AM (-2019/03)
4500106	4	1	• Block cpl	Lift

© 2025 Jost