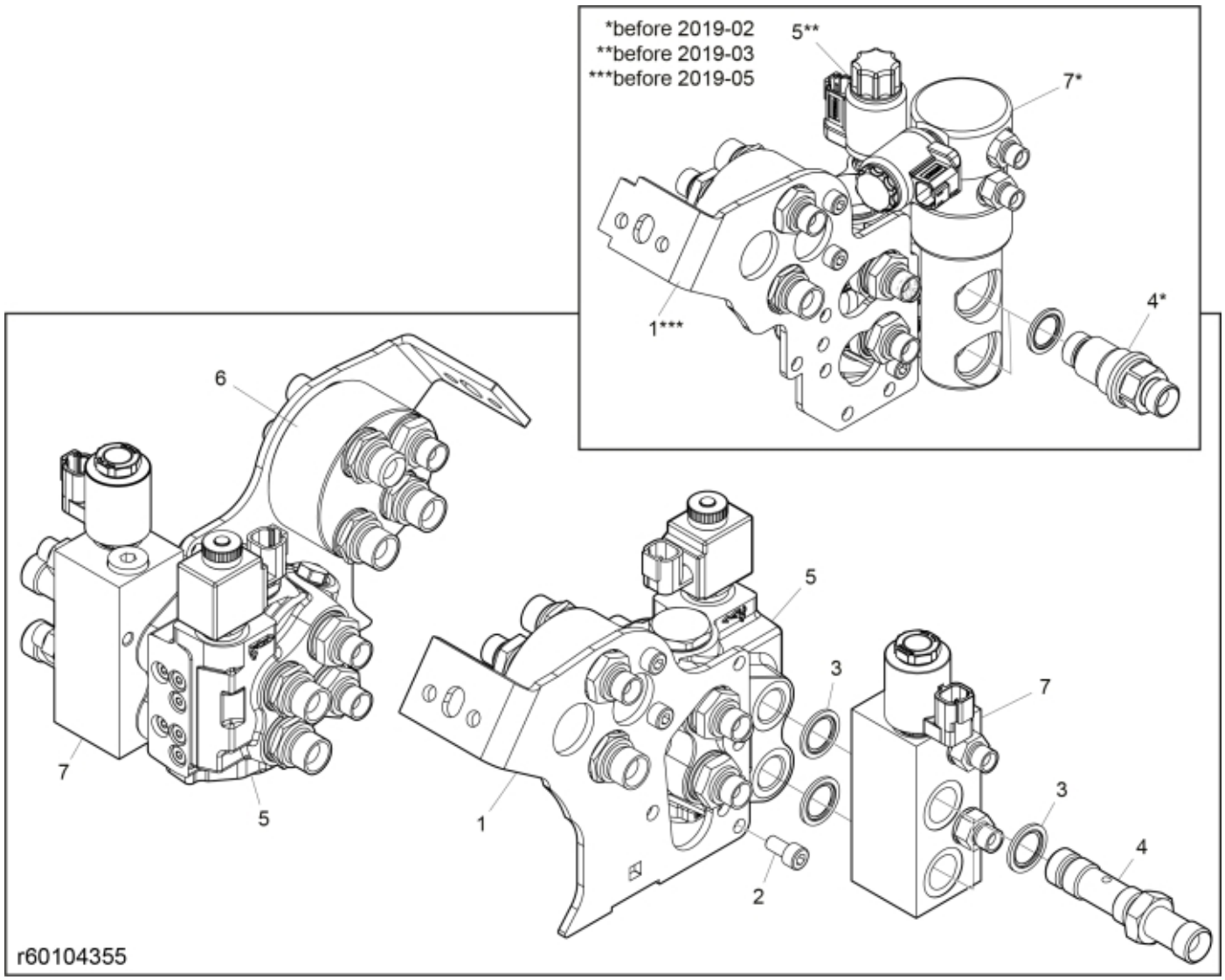
*before 2019-02
**before 2019-03
***before 2019-05
5**
7*
1***
4*
6
7
5
5
3
7
3
4
1
2
r60104355

© 2025 Jost

Part assemblies CVU 3rd service +QLock

PartNo	Pos	Qty	Name	Specifications
4500278		1	CVU 3rd service +QLock	
60037851	1	1	• Bracket	(2019/05-)
60107381	1***	1	• Bracket	(-2019/05)
5050342	2	4	• Screw	MC6S M8x14 (8.8)
5013853	3	4	• Dowty washer	Tredo 1/2", Part is included in kit 60007907 Hose cpl., 9032177 Hose cpl.
60034110	4	2	• Hollow screw	G1/2" Banjo (2019/02-)
60104390	4*	2	• Adaptor	G1/2" Banjo (-2019/02)
4501108	5	1	• Block cpl	3rd service, Replaces 4500218, 3/1/2019 12:00:00 AM (2019/03-)
4500218	5**	1	• Block cpl	3rd service, 2/28/2019 12:00:00 AM (-2019/03)
4500106	6	1	• Block cpl	Lift
4501099	7	1	• Block, Q-Lock	Hydr. Lock, Replaces 4500190, 2/1/2019 12:00:00 AM (2019/02-)
4500190	7*	1	• Block cpl	Hydr. Lock, 1/31/2019 12:00:00 AM (-2019/02)

© 2025 Jost