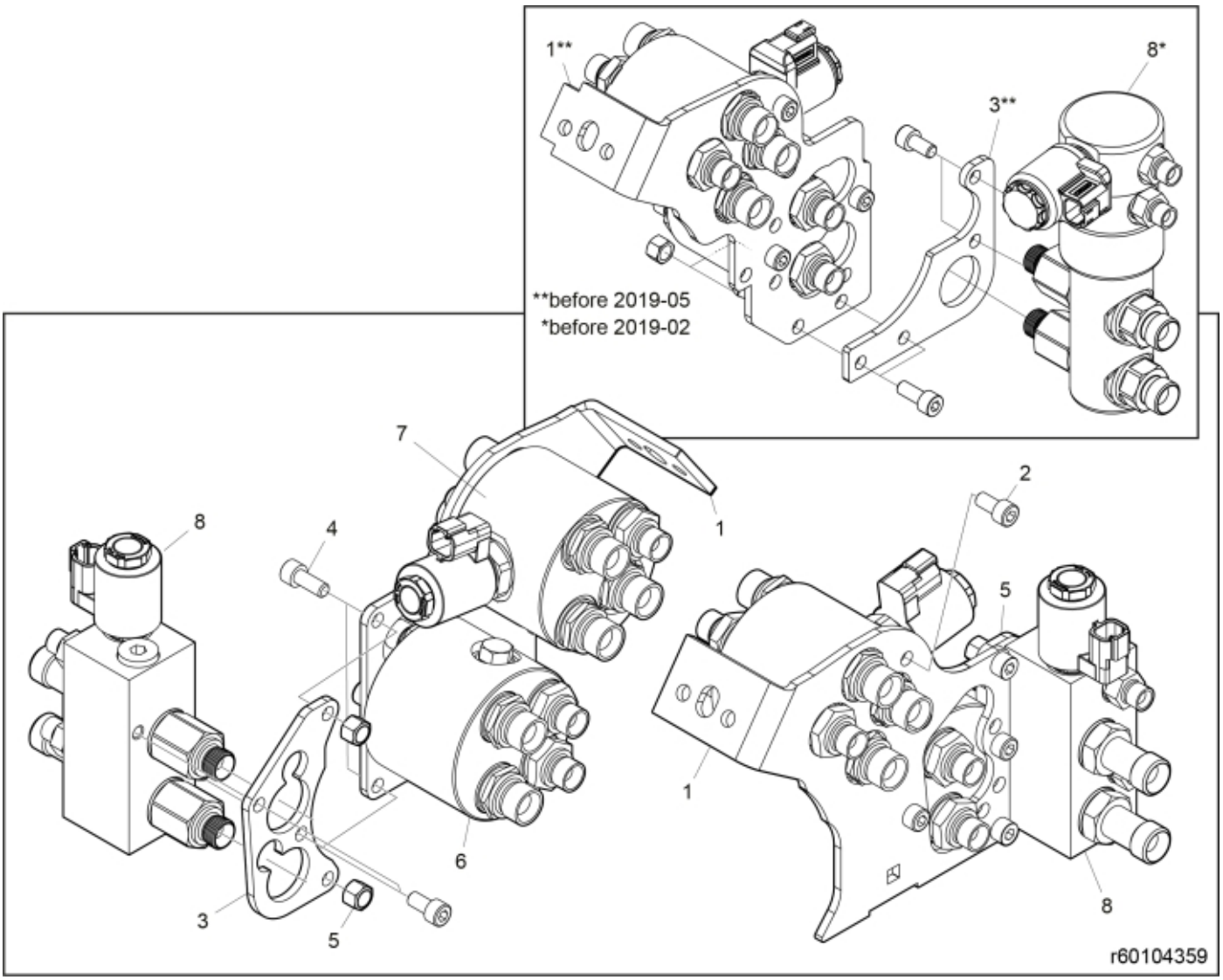

© 2025 Jost

Part assemblies CVU Live3+Q Lock+SoftDrive

PartNo	Pos	Qty	Name	Specifications
4500282		1	CVU Live3+Q Lock+SoftDrive	
60037851	1	1	• Bracket	(2019/05-)
60107381	1**	1	• Bracket	(-2019/05)
5050342	2	6	• Screw	MC6S M8x14 (8.8)
60037972	3	1	• Bracket	(2019/05-)
60104271	3**	1	• Bracket	(-2019/05)
5004061	4	2	• Screw	MC6S M8x20
5011553	5	2	• Nut	M6M M8 Loc-king
4500126	6	1	• Block cpl	Tilt
4501145	7	1	• Block cpl	Lift, Replaces 4500131, 5/1/2019 12:00:00 AM
4501107	8	1	• Block cpl	Hydr. Lock, Replaces 4500151, 2/1/2019 12:00:00 AM (2019/02-)
4500151	8*	1	• Block cpl	Hydr. Lock, 1/31/2019 12:00:00 AM (-2019/02)

© 2025 Jost