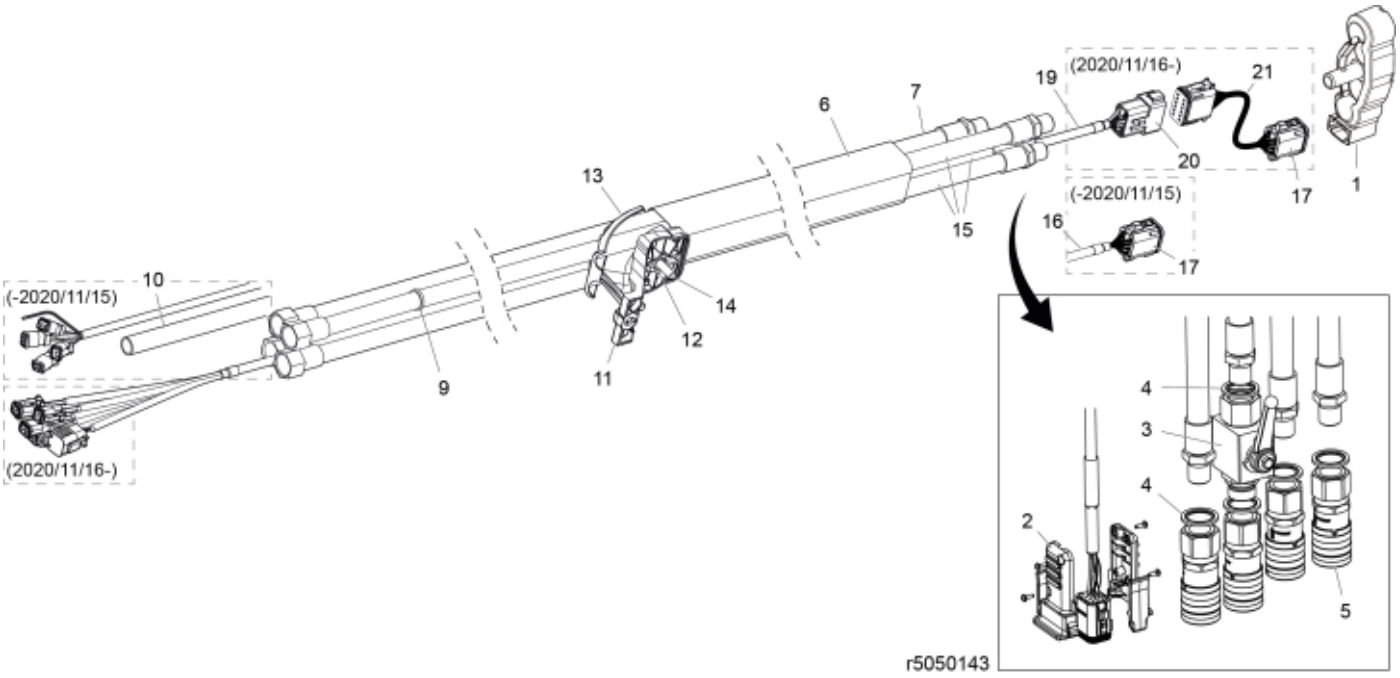
(2020/11/16-)
19
21
20
17
1
6
7
13
15
(-2020/11/15)
16
17
10
(-2020/11/15)
14
12
11
9
(2020/11/16-)
4
3
4
2
5
r5050143

© 2025 Jost

Part assemblies Main hose kit, FF

PartNo	Pos	Qty	Name	Specifications
5034234	1	1	Parking support kit	Replaces 5034233, 5033972
5103054	2	1	Connector handle	
5033898	3	1	Shut-off valve	1/2"
5013853	4	5	Dowty washer	Tredo 1/2", Part is included in kit 60007907 Hose cpl., 9032177 Hose cpl.
5044976	5	4	Coupling	3/8" (5044946)
5033894	6	1	Protection sleeve	800mm, D=60-70mm
60006917	7	1	Hose	1/2" L=3828 1/2GRU - 1/2GRLMA
5033621	9	10	Cable tie	4.6x150
60006910	10	1	Tube	L=2332 for loaders produced until 2020/11/15
60003841	11	1	Hose clamp	Lower
5011053	12	3	• Nut	M6M M8
60002825	13	1	Hose clamp	Upper
5004055	14	2	Screw	MC6S 8x70
60013038	15	3	Hose	1/2" L=3908 1/2GRU - 1/2GRLMA
60013042	16	1	Cable	L=4370 for loaders produced until 2020/11/15
5101083	17	1	• Connector, male	8-Pole
5033606	18	1	Cable tie	7,5 x 385
59050109	19	1	Electr. Cable	L=4190 for loaders produced from 2020/11/16
5050918	20	1	• Connector	Deutsch DT 12 pin female
59050115	21	1	Electr. Cable	QCS to LCS for loaders produced from 2020/11/16

© 2025 Jost