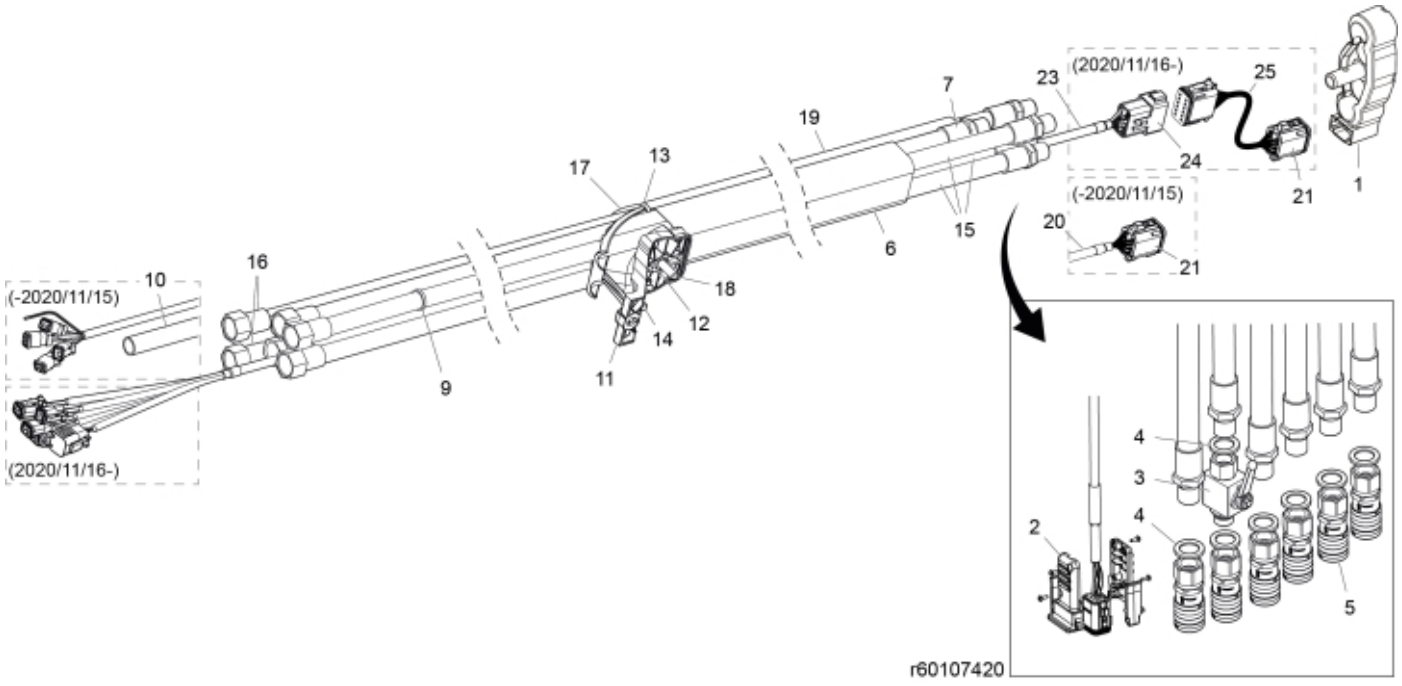
(2020/11/16-)
25
23
7
19
24
1
21
(-2020/11/15)
20
21
17
13
15
6
16
10
18
12
14
11
9
(-2020/11/15)
(2020/11/16-)
4
3
4
2
5
r60107420


© 2025 Jost

**Part assemblies** Main hose kit, FF + Live3

| PartNo | Pos | Qty | Name | Specifications |
|---|---|---|---|---|
| 5034234 | 1 | 1 | Parking support kit | Replaces 5034233, 5033972 |
| 5103054 | 2 | 1 | Connector handle | |
| 5033898 | 3 | 1 | Shut-off valve | 1/2" |
| 5013853 | 4 | 7 | Dowty washer | Tredo 1/2", Part is included in kit 60007907 Hose cpl., 9032177 Hose cpl. |
| 5044976 | 5 | 6 | Coupling | 3/8" (5044946) |
| 5033894 | 6 | 1 | Protection sleeve | 800mm, D=60-70mm |
| 60006912 | 7 | 1 | Hose | 1/2" L=3753 1/2GRU - 1/2GRLMA |
| 5033621 | 9 | 10 | Cable tie | 4.6x150 |
| 60006910 | 10 | 1 | Tube | L=2332 for loaders produced until 2020/11/15 |
| 60003841 | 11 | 1 | Hose clamp | Lower |
| 5011053 | 12 | 3 | • Nut | M6M M8 |
| 60002825 | 13 | 1 | Hose clamp | Upper |
| 5004055 | 14 | 1 | Screw | MC6S 8x70 |
| 60006917 | 15 | 3 | Hose | 1/2" L=3828 1/2GRU - 1/2GRLMA |
| 60008568 | 16 | 2 | Hose | 3/8" L=3910 1/2GRU - 3/8GRLMA |
| 60003881 | 17 | 1 | Hose clamp | |
| 60012277 | 18 | 1 | Screw | MC6LS M8x80 (8.8) |
| 5034121 | 19 | 1 | Protection sleeve | |
| 60006908 | 20 | 1 | Cable | L=4290 for loaders produced until 2020/11/15 |
| 5101083 | 21 | 1 | • Connector, male | 8-Pole |
| 5033606 | 22 | 1 | Cable tie | 7,5 x 385 |
| 59050109 | 23 | 1 | Electr. Cable | L=4190 for loaders produced from 2020/11/16 |
| 5050918 | 24 | 1 | • Connector | Deutsch DT 12 pin female |
| 59050115 | 25 | 1 | Electr. Cable | QCS to LCS for loaders produced from 2020/11/16 |


© 2025 Jost