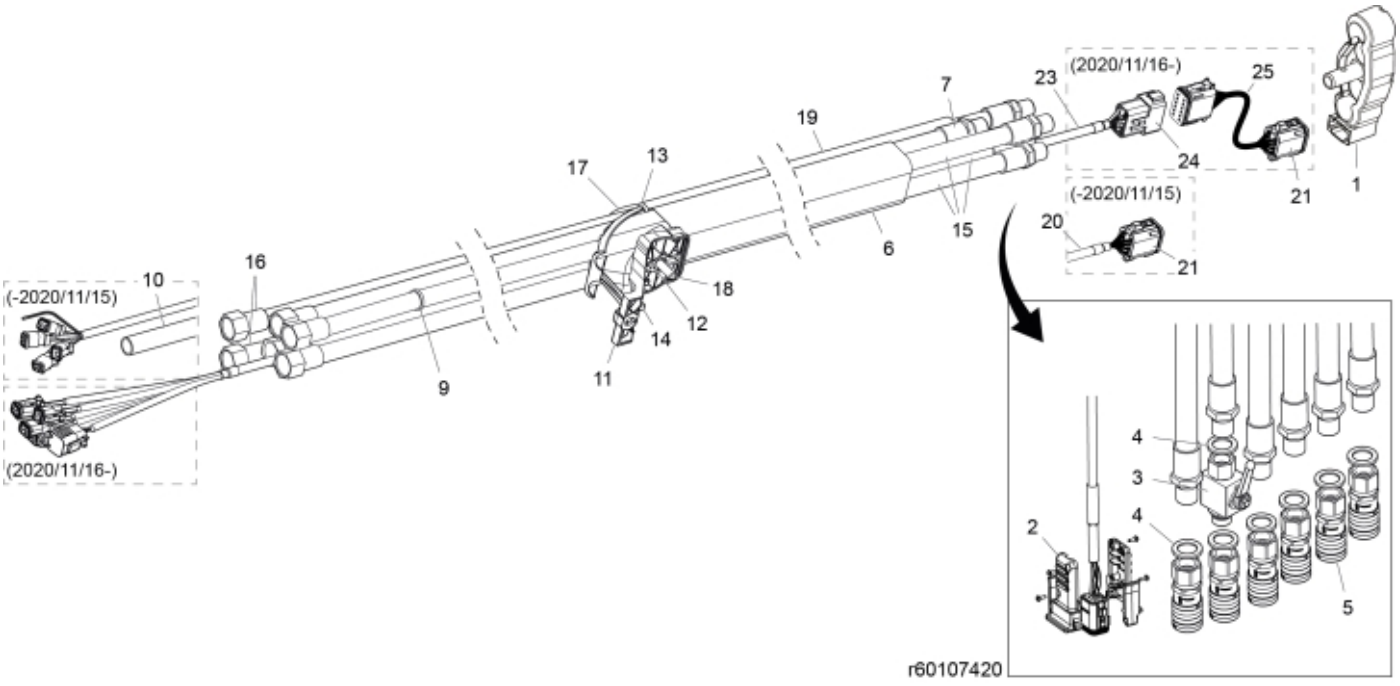
(2020/11/16-)
25
23
7
19
24
1
21
(-2020/11/15)
20
21
17
13
15
6
16
10
(-2020/11/15)
18
12
14
11
9
(2020/11/16-)
4
3
4
2
5
r60107420

© 2025 Jost

Part assemblies Main hose kit, FF + Live3

PartNo	Pos	Qty	Name	Specifications
5034234	1	1	Parking support kit	Replaces 5034233, 5033972
5103054	2	1	Connector handle	
5033898	3	1	Shut-off valve	1/2"
5013853	4	7	Dowty washer	Tredo 1/2", Part is included in kit 60007907 Hose cpl., 9032177 Hose cpl.
5044976	5	6	Coupling	3/8" (5044946)
5033894	6	1	Protection sleeve	800mm, D=60-70mm
60015655	7	1 PCS	Hose	1/2" L=3995 1/2GRU - 1/2GRLMA
5033621	9	10	Cable tie	4.6x150
60007058	10	1	Tube	L=2640 for loaders produced until 2020/11/15
60003841	11	1	Hose clamp	Lower
5011053	12	3	• Nut	M6M M8
60002825	13	1	Hose clamp	Upper
5004055	14	1	Screw	MC6S 8x70
60007049	15	3	Hose	1/2" L=4070 1/2GRU - 1/2GRLMA
60008547	16	2 PCS	Hose	3/8" L=4150 1/2GRU - 3/8GRLMA
60003881	17	1	Hose clamp	
60012277	18	1	Screw	MC6LS M8x80 (8.8)
5034121	19	1	Protection sleeve	
60003889	20	1	Cable	L=4545 for loaders produced until 2020/11/15
5101083	21	1	• Connector, male	8-Pole
5033606	22	1	Cable tie	7,5 x 385
59050108	23	1 PCS	Electr. Cable	L=4615 for loaders produced from 2020/11/16
5050918	24	1	• Connector	Deutsch DT 12 pin female
59050115	25	1	Electr. Cable	QCS to LCS for loaders produced from 2020/11/16

© 2025 Jost