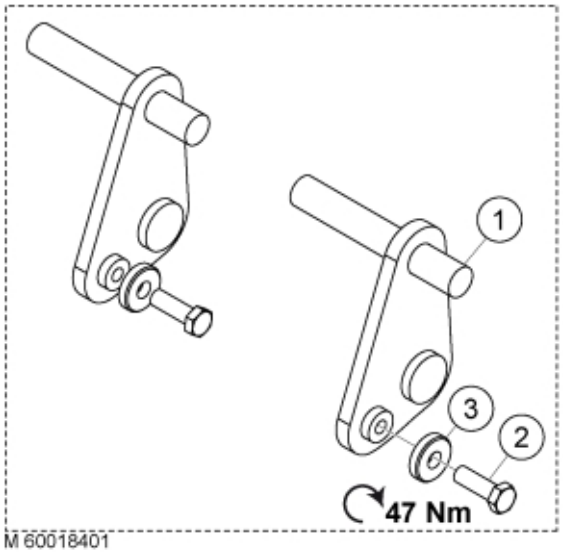

M 60018401

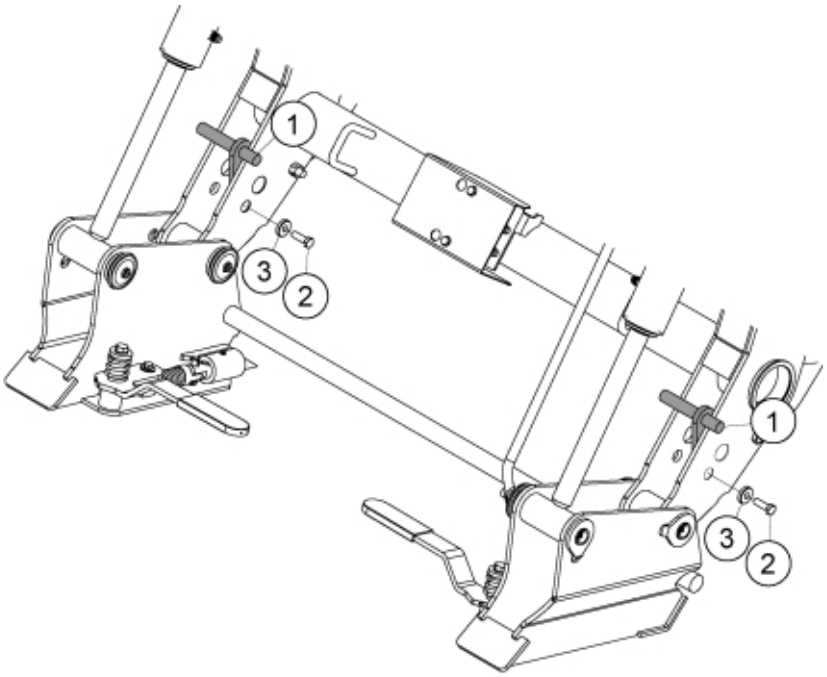

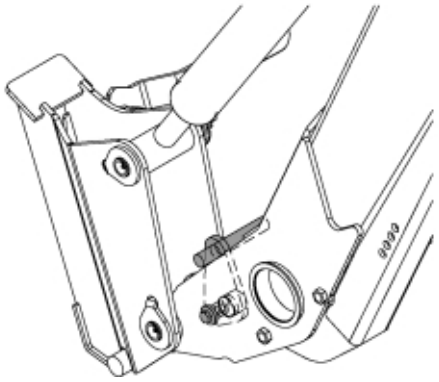

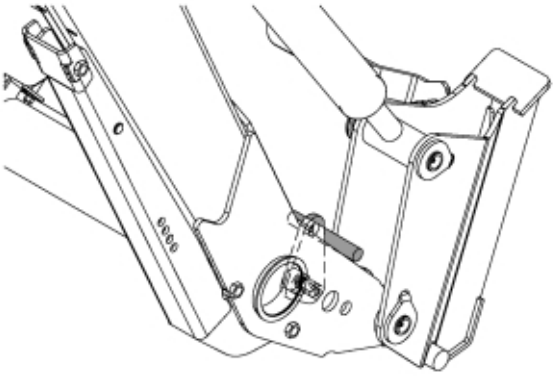

© 2025 Jost

Part assemblies Mechanical Stop

PartNo	Pos	Qty	Name	Specifications
60018401		1 PCS	Mechanical Stop	
60017982	1	2 PCS	Mechanical Stop	
5002077	2	2	Screw	M6S 10x30
5013177	3	2	Washer	TBRSB 10.5x28x6

© 2025 Jost