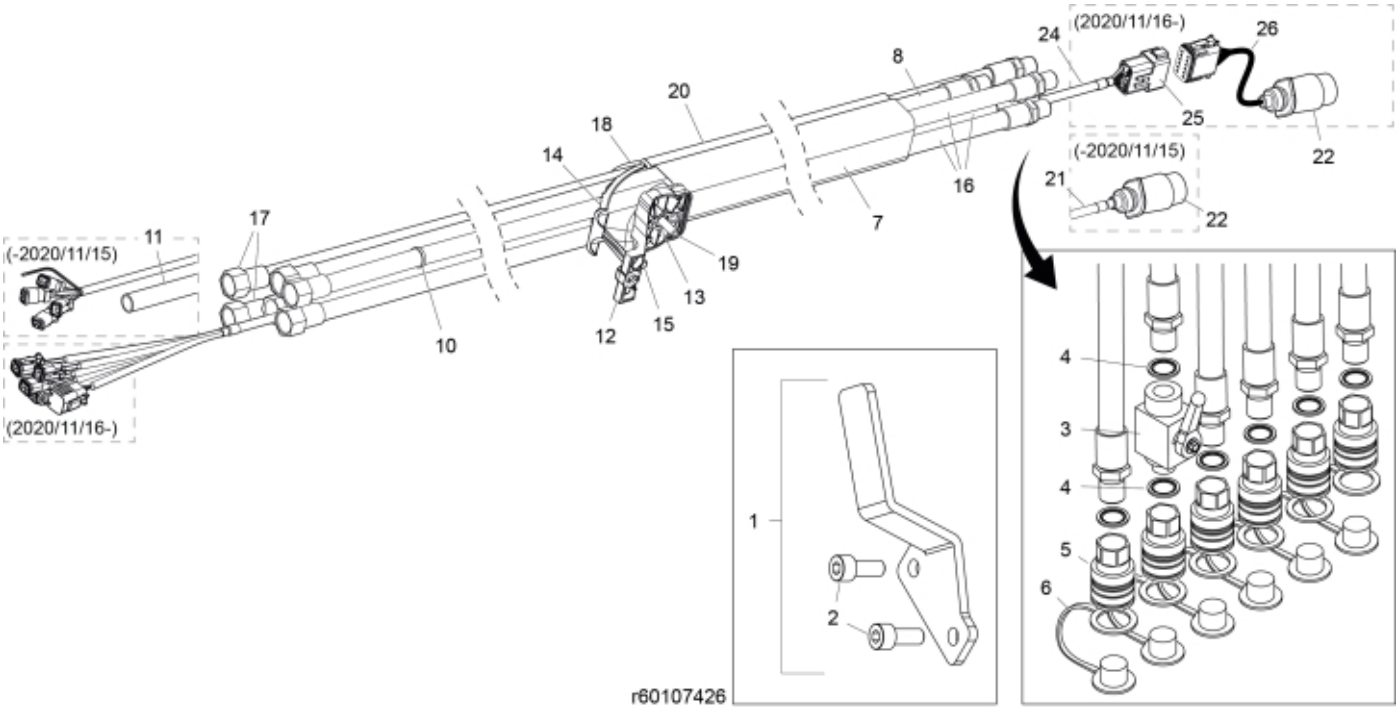
(2020/11/16-)
24
26
8
20
18
14
25
22
(-2020/11/15)
21
16
7
22
17
11
(-2020/11/15)
19
13
15
12
10
(2020/11/16-)
4
3
4
5
6
1
2
r60107426


© 2025 Jost

**Part assemblies** Main hose kit, ISO-A + Live3

| PartNo | Pos | Qty | Name | Specifications |
|---|---|---|---|---|
| 60015929 | 1 | 1 | Holder cpl. | |
| 5004061 | 2 | 2 | • Screw | MC6S M8x20 |
| 5033898 | 3 | 1 | Shut-off valve | 1/2" |
| 5013853 | 4 | 7 | Dowty washer | Tredo 1/2", Part is included in kit 60007907 Hose cpl., 9032177 Hose cpl. |
| 5044127 | 5 | 6 | Quick Coupling | 1/2", Part is included in kit 60007907 Hose cpl., 9032177 Hose cpl. |
| 5044130 | 6 | 6 | Dust Cover | Part is included in kit 60007907 Hose cpl., 9032177 Hose cpl. |
| 5033894 | 7 | 1 | Protection sleeve | 800mm, D=60-70mm |
| 60020124 | 8 | 1 PCS | Hose | 1/2" L=3426 1/2GRU - 1/2GRLMA |
| 5033621 | 10 | 9 | Cable tie | 4.6x150 |
| 60006864 | 11 | 1 PCS | Tube | L=2000 for loaders produced until 2020/11/15 |
| 60003841 | 12 | 1 | Hose clamp | Lower |
| 5011053 | 13 | 3 | • Nut | M6M M8 |
| 60002825 | 14 | 1 | Hose clamp | Upper |
| 5004055 | 15 | 1 | Screw | MC6S 8x70 |
| 60006823 | 16 | 3 | Hose | 1/2" L=3501 1/2GRU - 1/2GRLMA |
| 60008563 | 17 | 2 PCS | Hose | 3/8" L=3581 1/2GRU - 3/8GRLMA |
| 60003881 | 18 | 1 | Hose clamp | |
| 60012277 | 19 | 1 | Screw | MC6LS M8x80 (8.8) |
| 5034121 | 20 | 1 | Protection sleeve | |
| 60003944 | 21 | 1 | Cable | L=4013 for loaders produced until 2020/11/15 |
| 5024379 | 22 | 1 | • Connector | |
| 5033606 | 23 | 1 | Cable tie | 7,5 x 385 |
| 59050110 | 24 | 1 | Electr. Cable | L=3875 for loaders produced from 2020/11/16 |
| 5050918 | 25 | 1 | • Connector | Deutsch DT 12 pin female |
| 59050117 | 26 | 1 | Electr. Cable | QCS to Caravan for loaders produced from 2020/11/16 |


© 2025 Jost