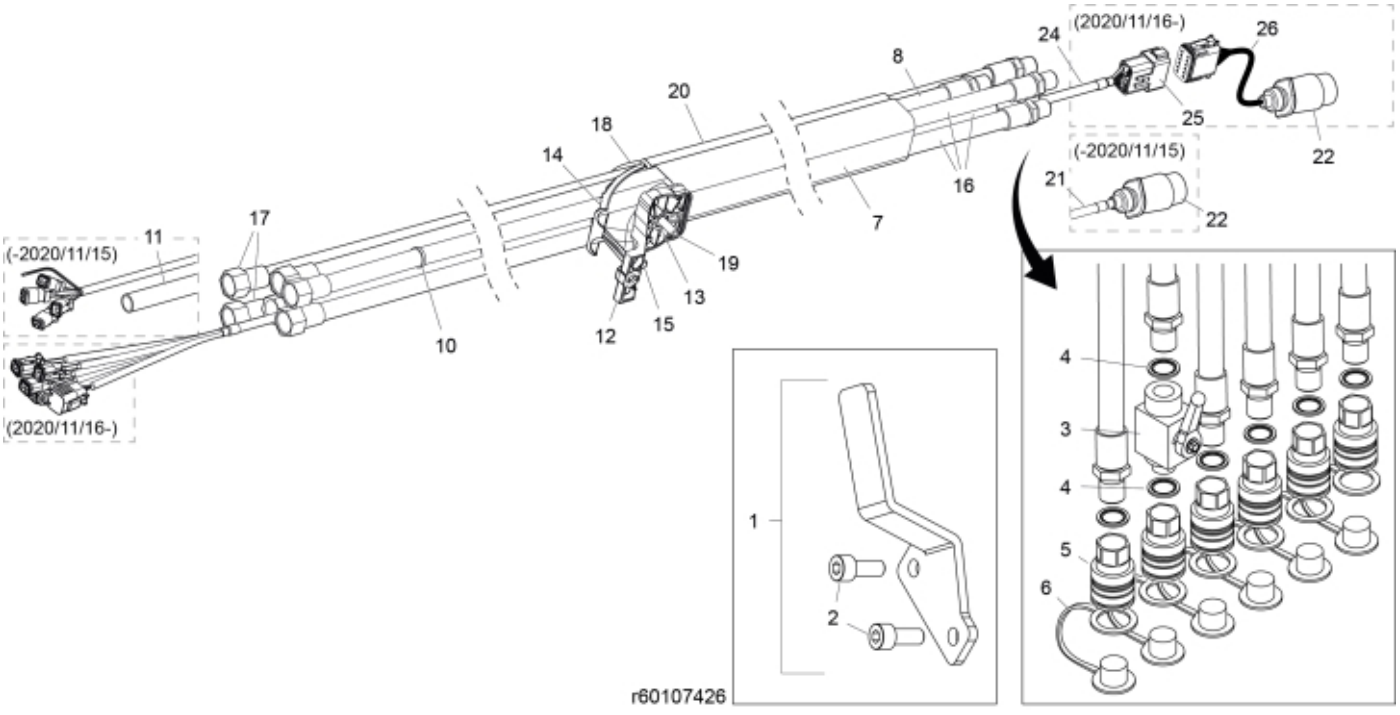
(2020/11/16-)
24
26
8
20
18
14
25
22
(-2020/11/15)
21
16
7
22
17
11
(-2020/11/15)
19
13
10
12
15
(2020/11/16-)
4
3
4
5
6
1
2
r60107426

© 2025 Jost

Part assemblies Main hose kit, ISO-A + Live3

PartNo	Pos	Qty	Name	Specifications
60015929	1	1	Holder cpl.	
5004061	2	2	• Screw	MC6S M8x20
5033898	3	1	Shut-off valve	1/2"
5013853	4	7	Dowty washer	Tredo 1/2", Part is included in kit 60007907 Hose cpl., 9032177 Hose cpl.
5044127	5	6	Quick Coupling	1/2", Part is included in kit 60007907 Hose cpl., 9032177 Hose cpl.
5044130	6	6	Dust Cover	Part is included in kit 60007907 Hose cpl., 9032177 Hose cpl.
5033894	7	1	Protection sleeve	800mm, D=60-70mm
60006917	8	1	Hose	1/2" L=3828 1/2GRU - 1/2GRLMA
5033621	10	10	Cable tie	4.6x150
60006910	11	1	Tube	L=2332 for loaders produced until 2020/11/15
60003841	12	1	Hose clamp	Lower
5011053	13	3	• Nut	M6M M8
60002825	14	1	Hose clamp	Upper
5004055	15	1	Screw	MC6S 8x70
60013038	16	3	Hose	1/2" L=3908 1/2GRU - 1/2GRLMA
60013040	17	2	Hose	3/8" L=3988 1/2GRU - 3/8GRLMA
60003881	18	1	Hose clamp	
60012277	19	1	Screw	MC6LS M8x80 (8.8)
5034121	20	1	Protection sleeve	
60013054	21	1	Cable	L=4518 for loaders produced until 2020/11/15
5024379	22	1	• Connector	
5033606	23	1	Cable tie	7,5 x 385
59050109	24	1	Electr. Cable	L=4190 for loaders produced from 2020/11/16
5050918	25	1	• Connector	Deutsch DT 12 pin female
59050117	26	1	Electr. Cable	QCS to Caravan for loaders produced from 2020/11/16

© 2025 Jost