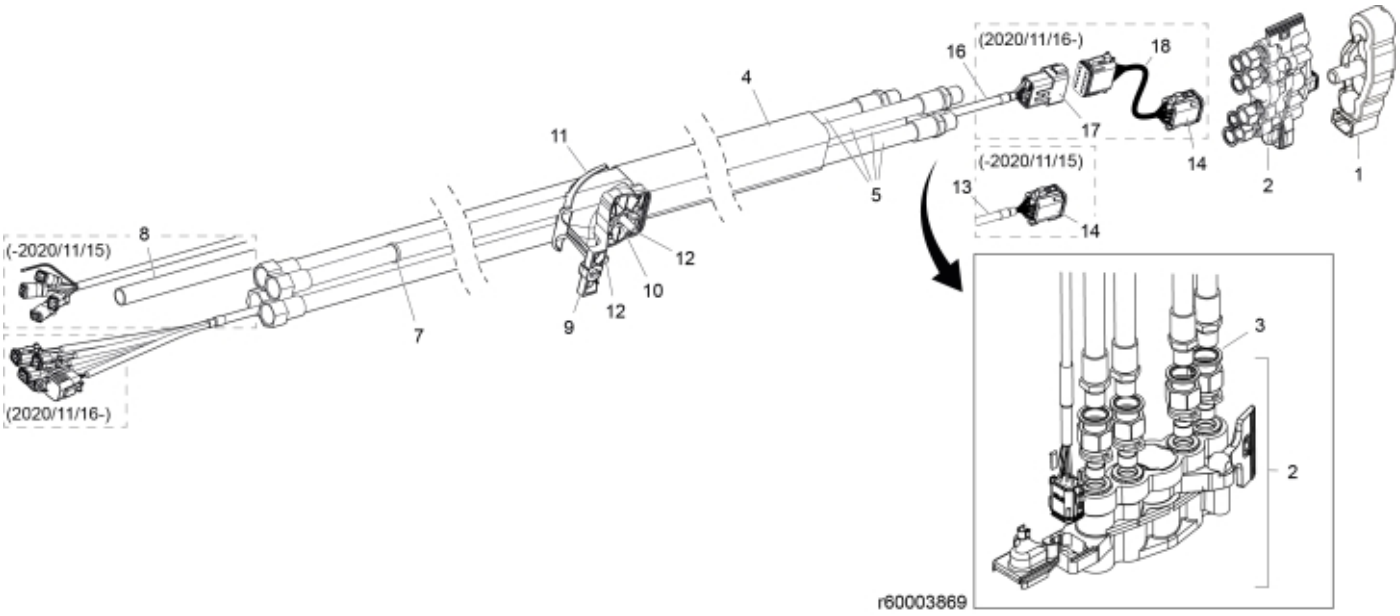
(2020/11/16-)
16
18
17
14
4
11
5
(-2020/11/15)
13
14
2
1
(-2020/11/15)
8
12
10
12
9
7
(2020/11/16-)
3
2
r60003869

© 2025 Jost

Part assemblies Main hose kit, MC4

PartNo	Pos	Qty	Name	Specifications
5034234	1	1	Parking support kit	Replaces 5034233, 5033972
5044949	2	1	Multi coupling MC4	MC-4
5013853	3	4	Dowty washer	Tredo 1/2", Part is included in kit 60007907 Hose cpl., 9032177 Hose cpl.
5033894	4	1	Protection sleeve	800mm, D=60-70mm
60006971	5	4 PCS	Hose	1/2" L=3265 1/2GRU - 1/2GRLMA
5033621	7	9	Cable tie	4.6x150
60006970	8	1 PCS	Tube	L=1763 for loaders produced until 2020/11/15
60003841	9	1	Hose clamp	Lower
5011053	10	3	• Nut	M6M M8
60002825	11	1	Hose clamp	Upper
5004055	12	2	Screw	MC6S 8x70
60003858	13	1	Cable	L=3740 for loaders produced until 2020/11/15
5101083	14	1	• Connector, male	8-Pole
5033606	15	1	Cable tie	7,5 x 385
59050110	16	1	Electr. Cable	L=3875 for loaders produced from 2020/11/16
5050918	17	1	• Connector	Deutsch DT 12 pin female
59050115	18	1	Electr. Cable	QCS to LCS for loaders produced from 2020/11/16

© 2025 Jost