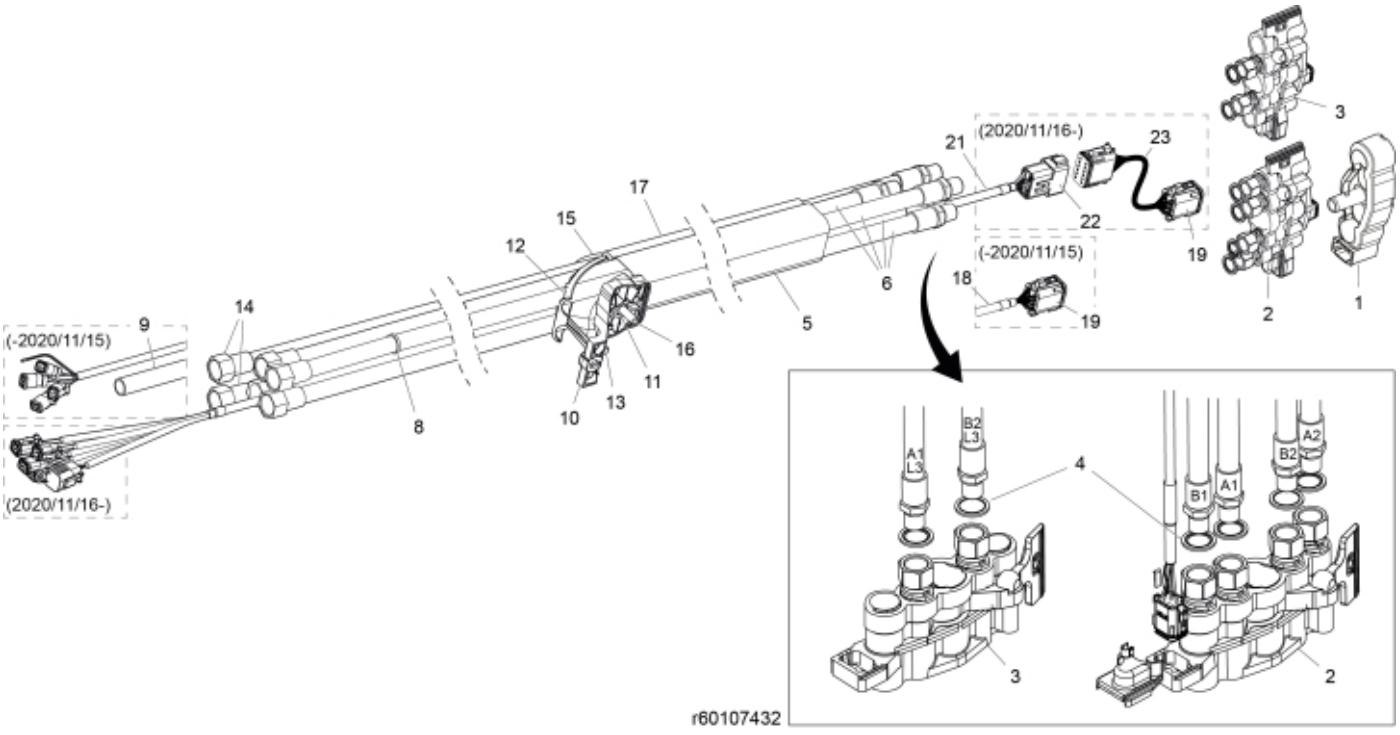
(-2020/11/15)
9
(2020/11/16-)
14
8
12
15
17
10
13
11
16
5
6
21
(2020/11/16-)
23
22
19
(-2020/11/15)
18
19
3
2
1
A1
L3
B2
L3
4
B1
A1
B2
A2
3
2
r60107432

© 2025 Jost

Part assemblies Main hose kit, MC4 + Live3

PartNo	Pos	Qty	Name	Specifications
5034234	1	1	Parking support kit	Replaces 5034233, 5033972
5044949	2	1	Multi coupling MC4	MC-4
5044950	3	1	Multi coupling MC2	MC-2
5013853	4	6	Dowty washer	Tredo 1/2", Part is included in kit 60007907 Hose cpl., 9032177 Hose cpl.
5033894	5	1	Protection sleeve	800mm, D=60-70mm
60006938	6	4	Hose	1/2" L=4335 1/2GRU - 1/2GRLMA
5033621	8	11	Cable tie	4.6x150
60006955	9	1	Tube	L=2828 for loaders produced until 2020/11/15
60003841	10	1	Hose clamp	Lower
5011053	11	3	• Nut	M6M M8
60002825	12	1	Hose clamp	Upper
5004055	13	1	Screw	MC6S 8x70
60008571	14	2 PCS	Hose	3/8" L=4415 1/2GRU - 3/8GRLMA
60003881	15	1	Hose clamp	
60012277	16	1	Screw	MC6LS M8x80 (8.8)
5034121	17	1	Protection sleeve	
60006932	18	1	Cable	L=4795 for loaders produced until 2020/11/15
5101083	19	1	• Connector, male	8-Pole
5033606	20	1	Cable tie	7,5 x 385
59050108	21	1 PCS	Electr. Cable	L=4615 for loaders produced from 2020/11/16
5050918	22	1	• Connector	Deutsch DT 12 pin female
59050115	23	1	Electr. Cable	QCS to LCS for loaders produced from 2020/11/16

© 2025 Jost