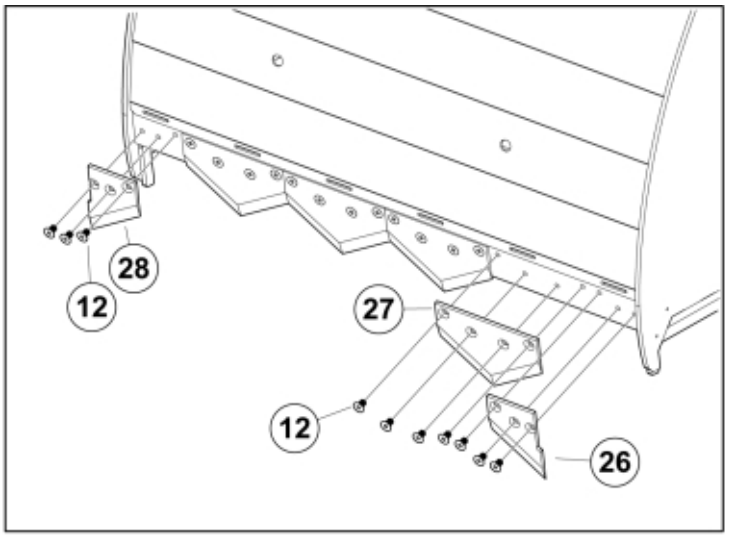

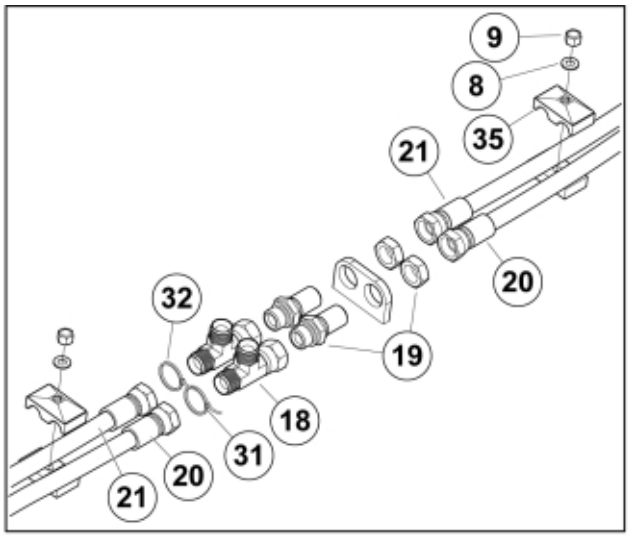

r11254224_28-1

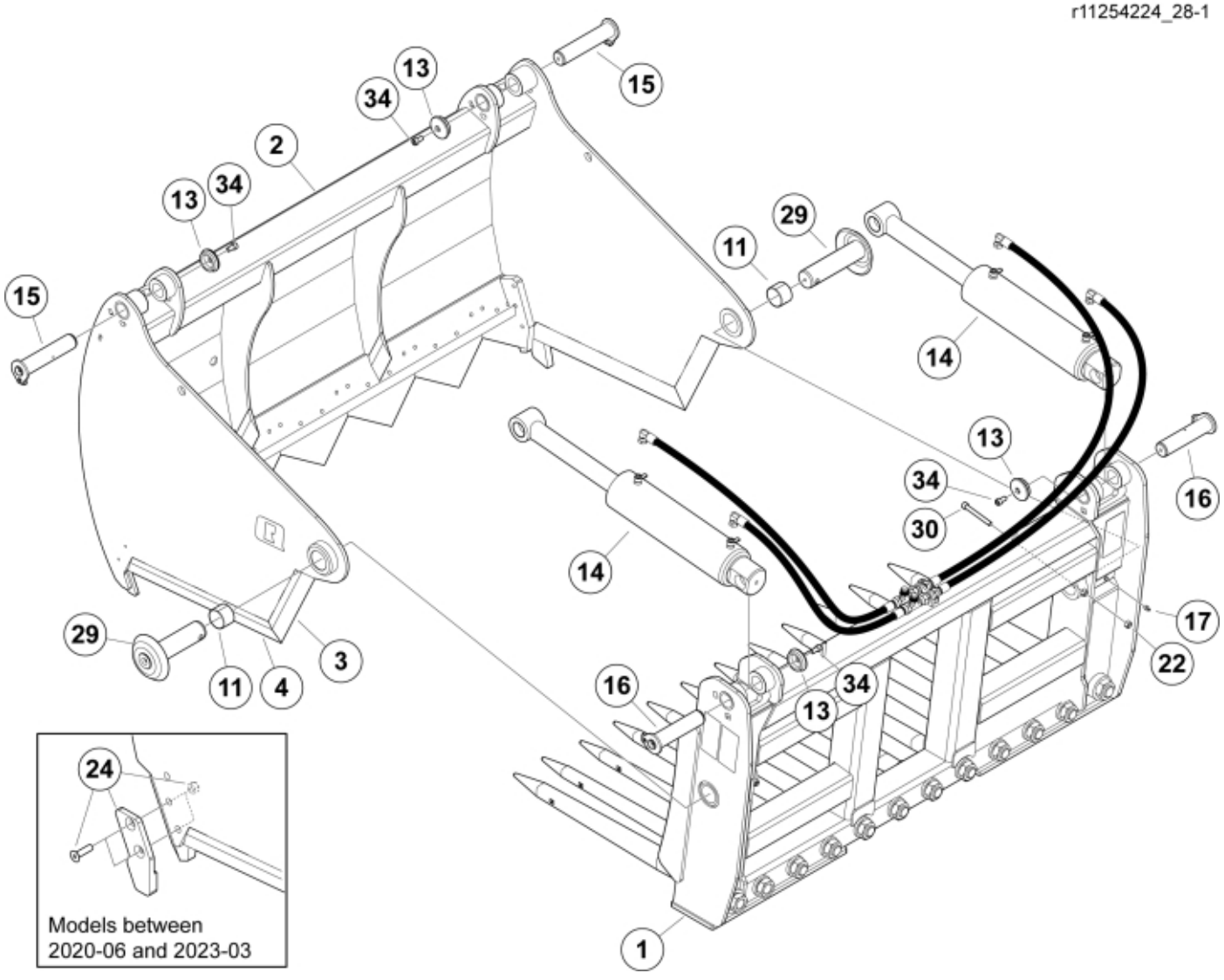

© 2025 Jost

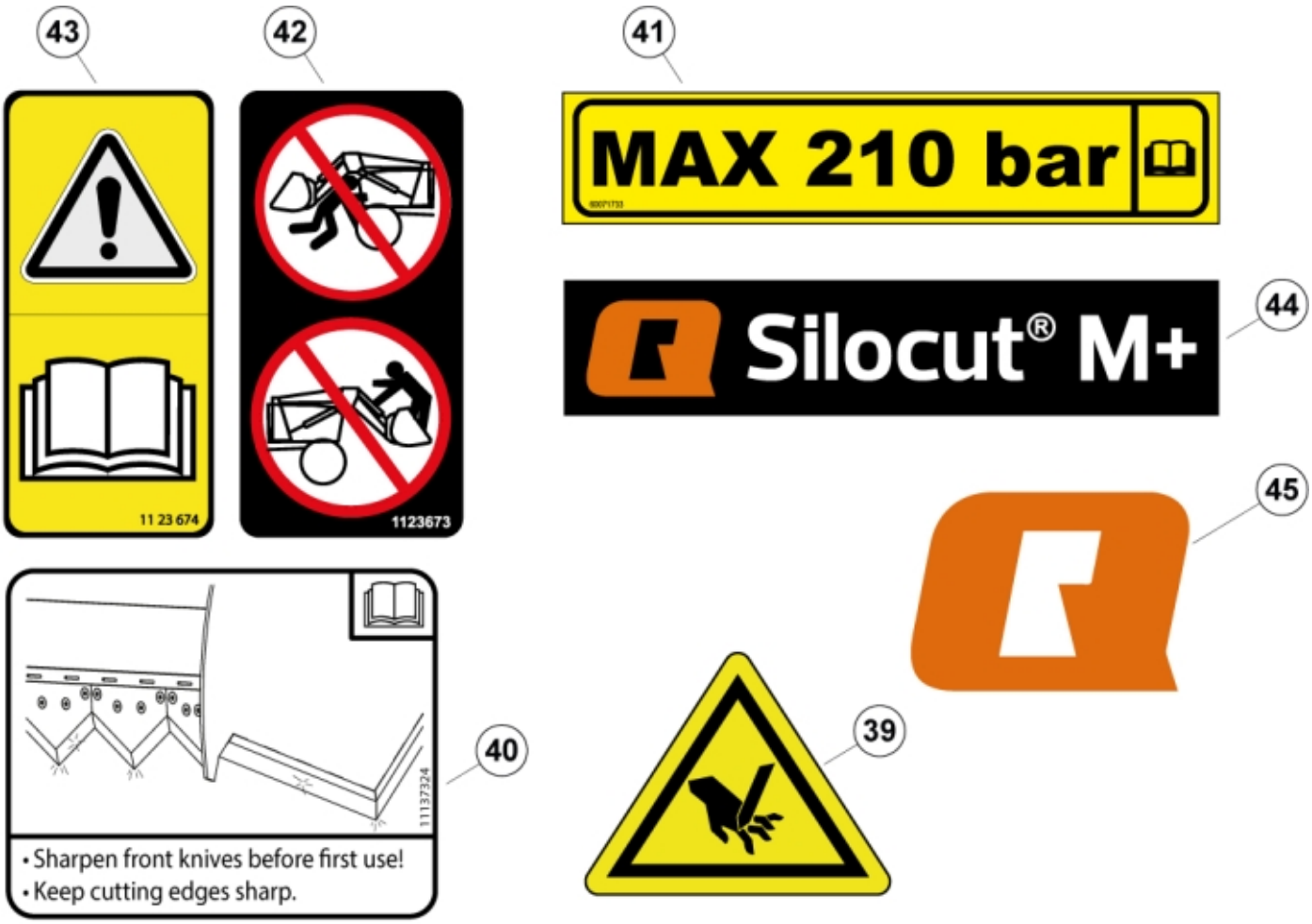

r11254224_4226_4228_4229_4231_4234_4237_5844_5960_5961_5962-2

© 2025 Jost

Part assemblies	Silocut M+ 125 Forged tines
Specification	Year From: 8/1/2016 12:00:00 AM

PartNo	Pos	Qty	Name	Specifications
11254224		1	Silocut M+ 125 Forged tines	8/1/2016 12:00:00 AM
60015770-17	1	1	Frame, without tines	
60060440-17	2	1	Jaw	
11261263	3	2	• Cutting edge	
60060723	4	2	• Cutting edge	
5013101	8	2	Washer	BRB 8,4 x 16
5011553	9	2	Nut	M6M M8 Loc-king
5018909	11	2	Bushing	
5050610	12	22	Screw	MF6S M12X20 (12.9)
5215131	13	4	Locking cover	
60119799-1	14	2	Cylinder	6/3/2026 12:00:00 AM
9020124	15	2	Pin cpl.	
9020126	16	2	Pin cpl.	
5023005	17	2	Greaser	M 10 x 1
5028031	18	2	T-Adapter	
11120580	19	2	Adapter cpl.	
10378383		1	Hose kit	
9032497	20	2	• Hose	3/8" L=680mm
9032498	21	2	• Hose	3/8" L=1030mm
5011554	22	2	Nut	Loc-King M10
60092323	24	1	Service kit	
		1	• Tooth	
		1	• Tooth	
		4	• Screw	
		4	• Nut	M12 Loc
11262627-22	26	1	Cutting edge LH	125mm
11262629-22	27	4	Cutting edge	250mm
11262628-22	28	1	Cutting edge RH	125mm
11262660	29	2	Pin	
5004956	30	2	Screw	MC6S M10 x 90
5022177	31	1	Cable tie	Red
5022179	32	1	Cable tie	Blue
60060201-22	33*	1	Tooth	
5050608	34	4	Screw	MC6S M10x20 Loc
5016968	35	2	Hose clamp	
11136516	39	1	Warning decal	
11137324	40	1	Warning decal	"Keep cutting edges sharp"
60071733	41	1	Decal	"Max 210 bar"
1123673	42	1	Warning decal	
1123674	43	1	Warning decal	"Read manual"
60062206	44	1	Decal	"Silocut M+"
60056616	45	2	Decal	"Q" medium 110mm
11136459	46	1	Warning decal	Only for North Am. Warning triangle
11136447	47	2	Warning decal	Only for North Am. DANGER

© 2025 Jost