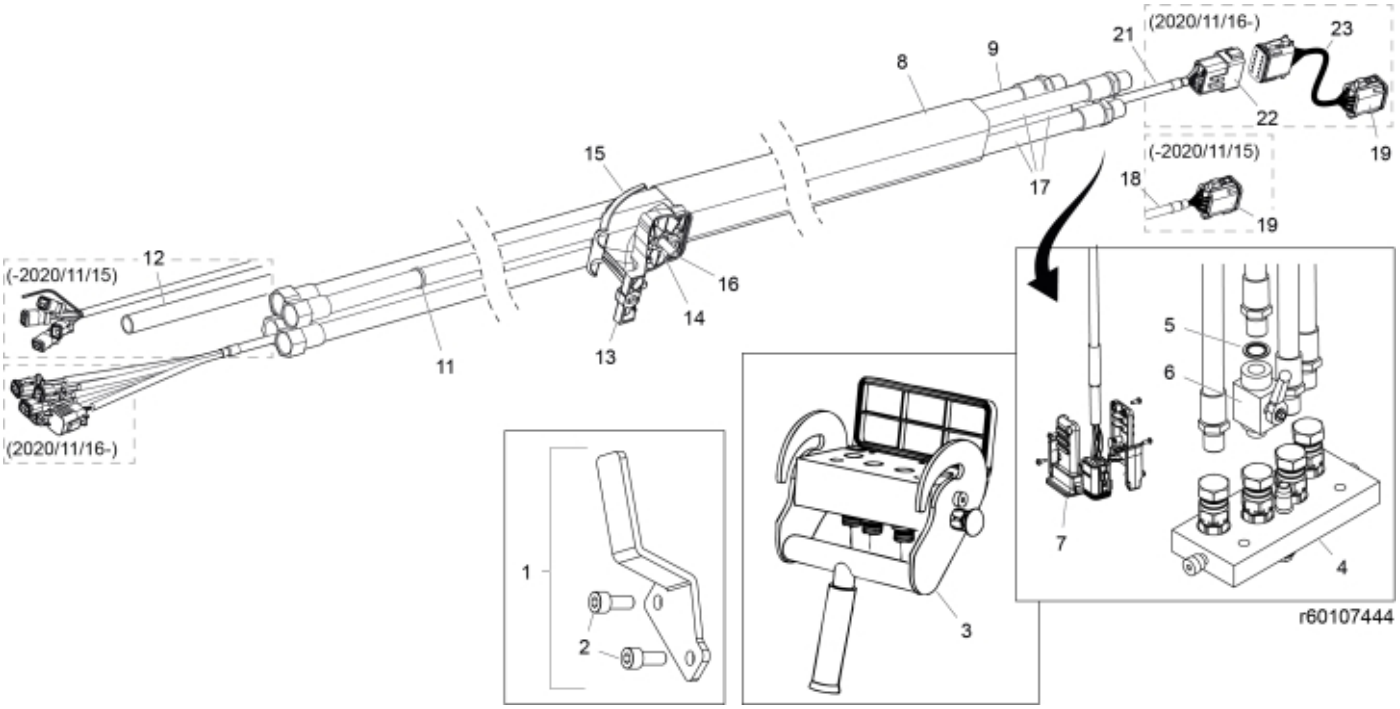
(2020/11/16-)
23
21
9
8
22
19
(-2020/11/15)
18
19
15
17
12
(-2020/11/15)
16
14
13
11
(2020/11/16-)
5
6
7
4
1
2
3
r60107444

© 2025 Jost

Part assemblies Main hose kit, HQ-4

PartNo	Pos	Qty	Name	Specifications
60015929	1	1	Holder cpl.	
5004061	2	2	• Screw	MC6S M8x20
5044906	3	1	Multi coupling, lower part	Lower part
5045403	4	1	Multi coupling, upper part	Upper part
5013853	5	1	Dowty washer	Tredo 1/2", Part is included in kit 60007907 Hose cpl., 9032177 Hose cpl.
5033898	6	1	Shut-off valve	1/2"
5103054	7	1	Connector handle	
5033894	8	1	Protection sleeve	800mm, D=60-70mm
60015655	9	1 PCS	Hose	1/2" L=3995 1/2GRU - 1/2GRLMA
5033621	11	10	Cable tie	4.6x150
60007058	12	1	Tube	L=2640 for loaders produced until 2020/11/15
60003841	13	1	Hose clamp	Lower
5011053	14	3	• Nut	M6M M8
60002825	15	1	Hose clamp	Upper
5004055	16	2	Screw	MC6S 8x70
60007049	17	3	Hose	1/2" L=4070 1/2GRU - 1/2GRLMA
60003889	18	1	Cable	L=4545 for loaders produced until 2020/11/15
5101083	19	1	• Connector, male	8-Pole
5033606	20	1	Cable tie	7,5 x 385
59050108	21	1 PCS	Electr. Cable	L=4615 for loaders produced from 2020/11/16
5050918	22	1	• Connector	Deutsch DT 12 pin female
59050115	23	1	Electr. Cable	QCS to LCS for loaders produced from 2020/11/16

© 2025 Jost