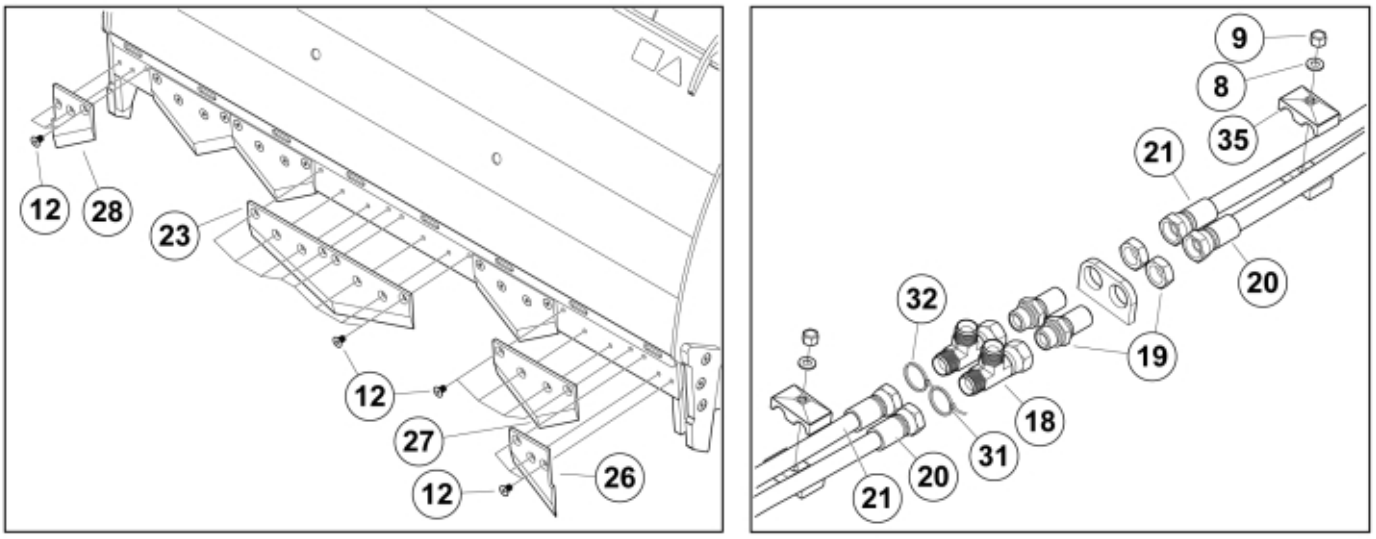

r11254231-1

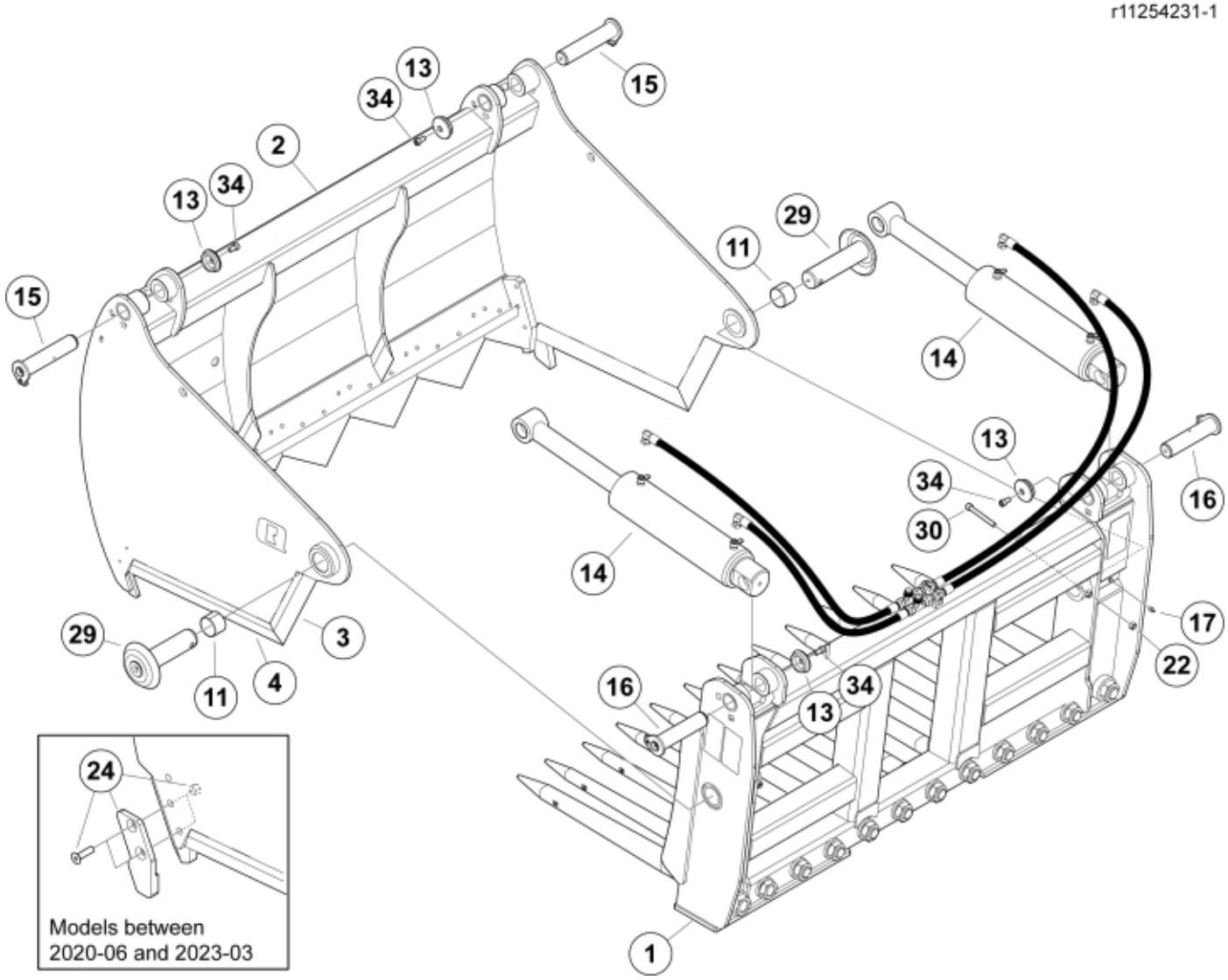

© 2025 Jost

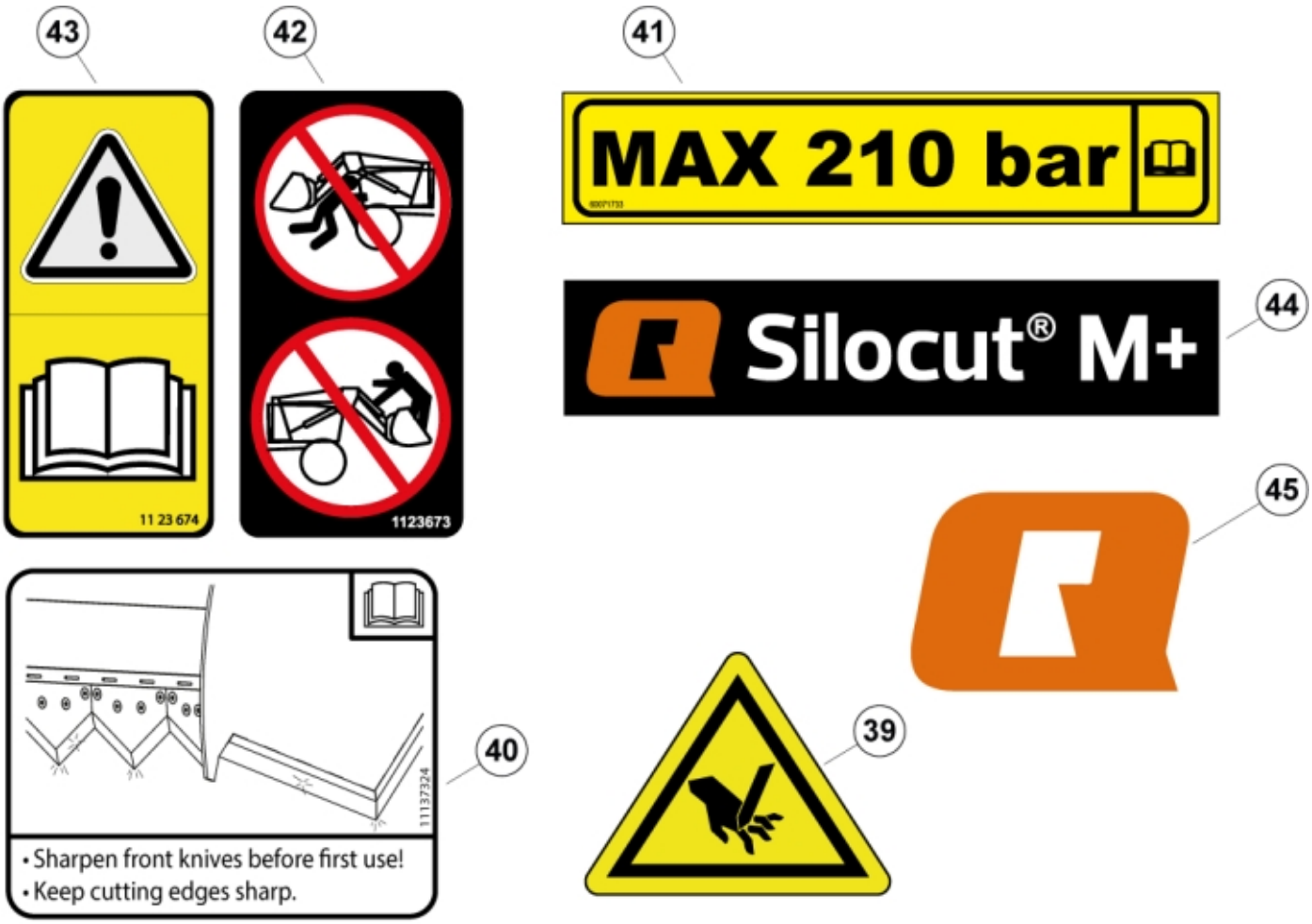

r11254224_4226_4228_4229_4231_4234_4237_5844_5960_5961_5962-2

© 2025 Jost

Part assemblies		Silocut M+ 175 Forged tines		
Specification		Year From: 8/1/2016 12:00:00 AM		
PartNo	**Pos**	**Qty**	**Name**	**Specifications**
11254231		1	Silocut M+ 175 Forged tines	8/1/2016 12:00:00 AM
60015818-17	1	1	Frame, without tines	
60071107-17	2	1 PCS	Jaw	
11261263	3	2	• Cutting edge	
60060723	4	2	• Cutting edge	
5013101	8	2	Washer	BRB 8,4 x 16
5011553	9	2	Nut	M6M M8 Loc-king
5018909	11	2	Bushing	
5050610	12	30	Screw	MF6S M12X20 (12.9)
5215131	13	4	Locking cover	
60119715-1	14	2	Cylinder	2/6/2026 12:00:00 AM
9020124	15	2	Pin cpl.	
9020126	16	2	Pin cpl.	
5023005	17	2	Greaser	M 10 x 1
5028031	18	2	T-Adapter	
11120580	19	2	Adapter cpl.	
10378387		1	Hose kit	
9032501	20	2	• Hose	3/8" L=930mm
9032502	21	2	• Hose	3/8" L=1280mm
5011554	22	2	Nut	Loc-King M10
60014466-22	23	1	Cutting edge	L=500mm
60092323	24	1	Service kit	
		1	• Tooth	
		1	• Tooth	
		4	• Screw	
		4	• Nut	M12 Loc
11262627-22	26	1	Cutting edge LH	125mm
11262629-22	27	4	Cutting edge	250mm
11262628-22	28	1	Cutting edge RH	125mm
11262660	29	2	Pin	
5004956	30	2	Screw	MC6S M10 x 90
5022177	31	1	Cable tie	Red
5022179	32	1	Cable tie	Blue
5050608	34	4	Screw	MC6S M10x20 Loc
5016968	35	2	Hose clamp	
11136516	39	2	Warning decal	
11137324	40	1	Warning decal	"Keep cutting edges sharp"
60018712	41	1	Warning decal	
1123673	42	1	Warning decal	
1123674	43	1	Warning decal	"Read manual"
11137135	44	1	Decal	Silocut
11137184	45	2	Decal	175 SG
11136459	46	1	Warning decal	Only for North Am. Warning triangle
11136447	47	2	Warning decal	Only for North Am. DANGER

© 2025 Jost