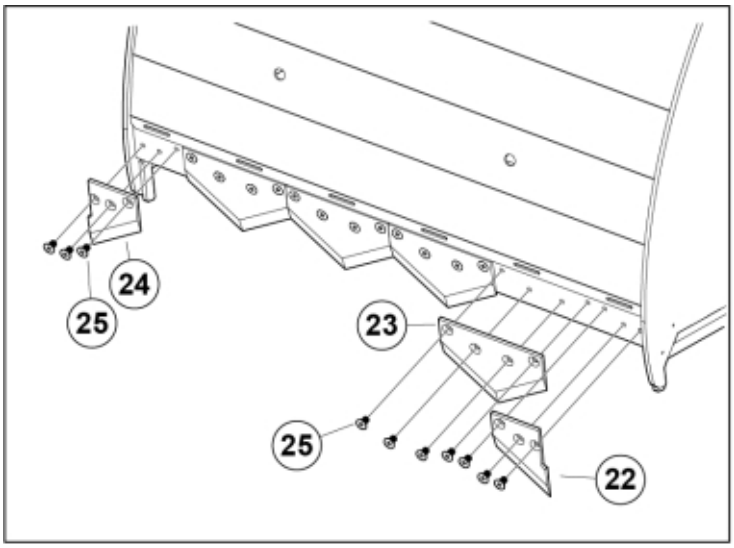
24
25
23
25
22

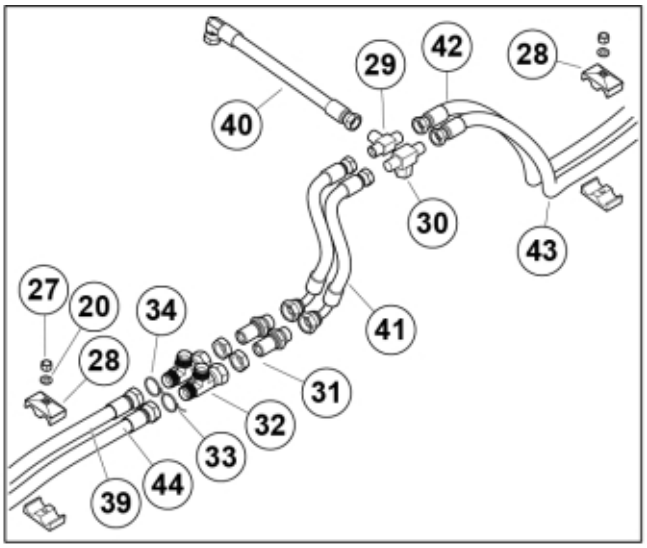
29
42
28
40
30
43
27
20
34
41
28
31
32
33
44
39

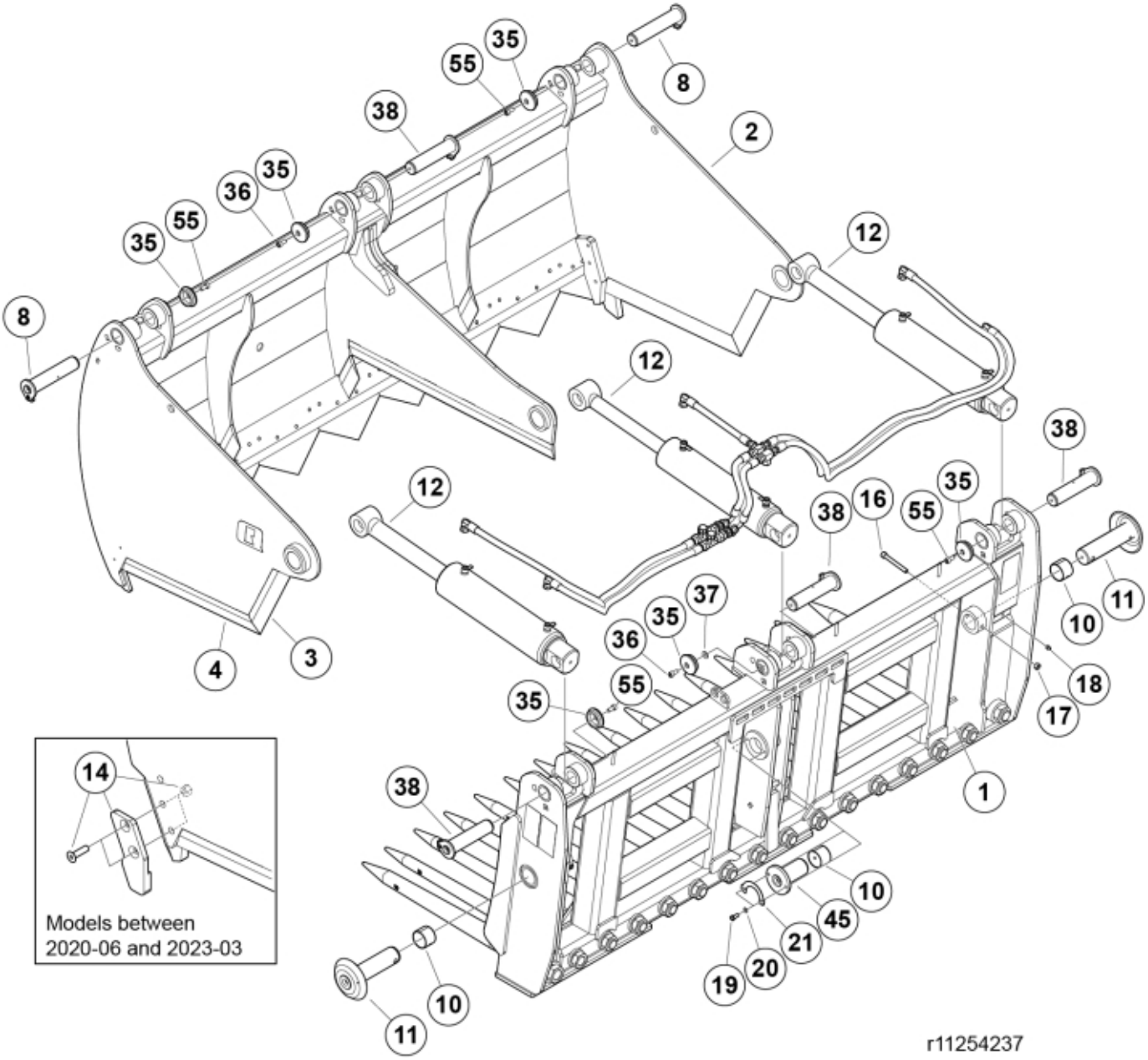
35
55
8
38
2
35
36
55
35
12
8
12
38
12
35
38
16
55
37
35
36
11
10
55
18
35
17
4
3
14
38
1
10
45
21
20
19
10
11
Models between
2020-06 and 2023-03
r11254237

© 2025 Jost

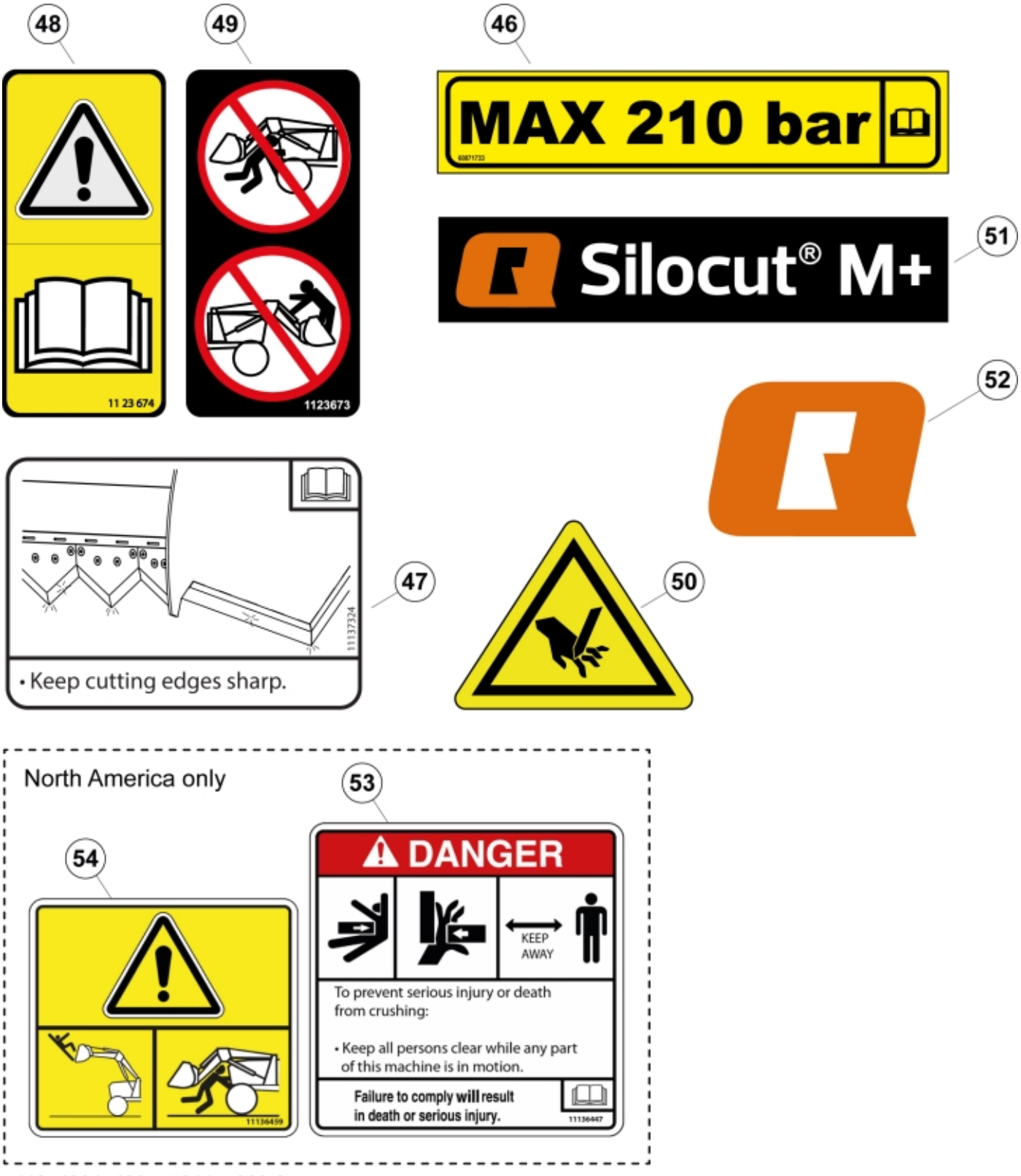

r11254234_4237_5844_5960-2

© 2025 Jost

Part assemblies		Silocut M+ 225 Forged tines		
Specification		Year From: 8/1/2016 12:00:00 AM		
PartNo	**Pos**	**Qty**	**Name**	**Specifications**
11254237		1	Silocut M+ 225 Forged tines	8/1/2016 12:00:00 AM
60015833-17	1	1	Frame, without tines	
60071118-17	2	1	Jaw	
11261263	3	2	• Cutting edge	
60060723	4	2	• Cutting edge	
9020124	8	2	Pin cpl.	
5018909	10	3	Bushing	
11262660	11	2	Pin	
60119714-1	12	3	Cylinder	2/4/2026 12:00:00 AM
60092323	14	1	Service kit	
		1	• Tooth	
		1	• Tooth	
		4	• Screw	
		4	• Nut	M12 Loc
5004956	16	2	Screw	MC6S M10 x 90
5011554	17	2	Nut	Loc-King M10
5023005	18	2	Greaser	M 10 x 1
5002051	19	2	Screw	M6S 8 x 20
5013101	20	5	Washer	BRB 8,4 x 16
60034182	21	1	Locking plate	
11262627-22	22	1	Cutting edge LH	125mm
11262629-22	23	8	Cutting edge	250mm
11262628-22	24	1	Cutting edge RH	125mm
5050610	25	38	Screw	MF6S M12X20 (12.9)
5011553	27	3	Nut	M6M M8 Loc-king
5016968	28	3	Hose clamp	
1120176	29	1	T-Adapter	R3/8" BSPP
5027834	30	1	T-Adapter	G3/8" BSPP
11120580	31	2	Adapter cpl.	
5028031	32	2	T-Adapter	
5022177	33	1	Cable tie	Red
5022179	34	1	Cable tie	Blue
5215131	35	6	Locking cover	
5004917	36	2	Screw	
5013110	37	1	Washer	BRB 10.5x22x2
9020126	38	4	Pin cpl.	
10378391		1	Hose kit	
9032502	39	1	• Hose	3/8" L=1280mm
9032508	40	1	• Hose	3/8" L=295mm
9032507	41	2	• Hose	3/8" L=400mm
9032510	42	1	• Hose	3/8" L=1755mm
9032509	43	1	• Hose	3/8" L=1405mm
9032501	44	1	• Hose	3/8" L=930mm
9020128	45	1	Pin cpl.	
11136516	46	1	Warning decal	
11137324	47	1	Warning decal	"Keep cutting edges sharp"
1123674	48	1	Warning decal	"Read manual"
1123673	49	1	Warning decal	

© 2025 Jost

60018641	50	1	Warning decal	
11137135	51	1	Decal	Silocut
11137188	52	2	Decal	225 SG
11136447	53	2	Warning decal	Only for North Am. DANGER
11136459	54	1	Warning decal	Only for North Am. Warning triangle
5050608	55	4	Screw	MC6S M10x20 Loc

© 2025 Jost