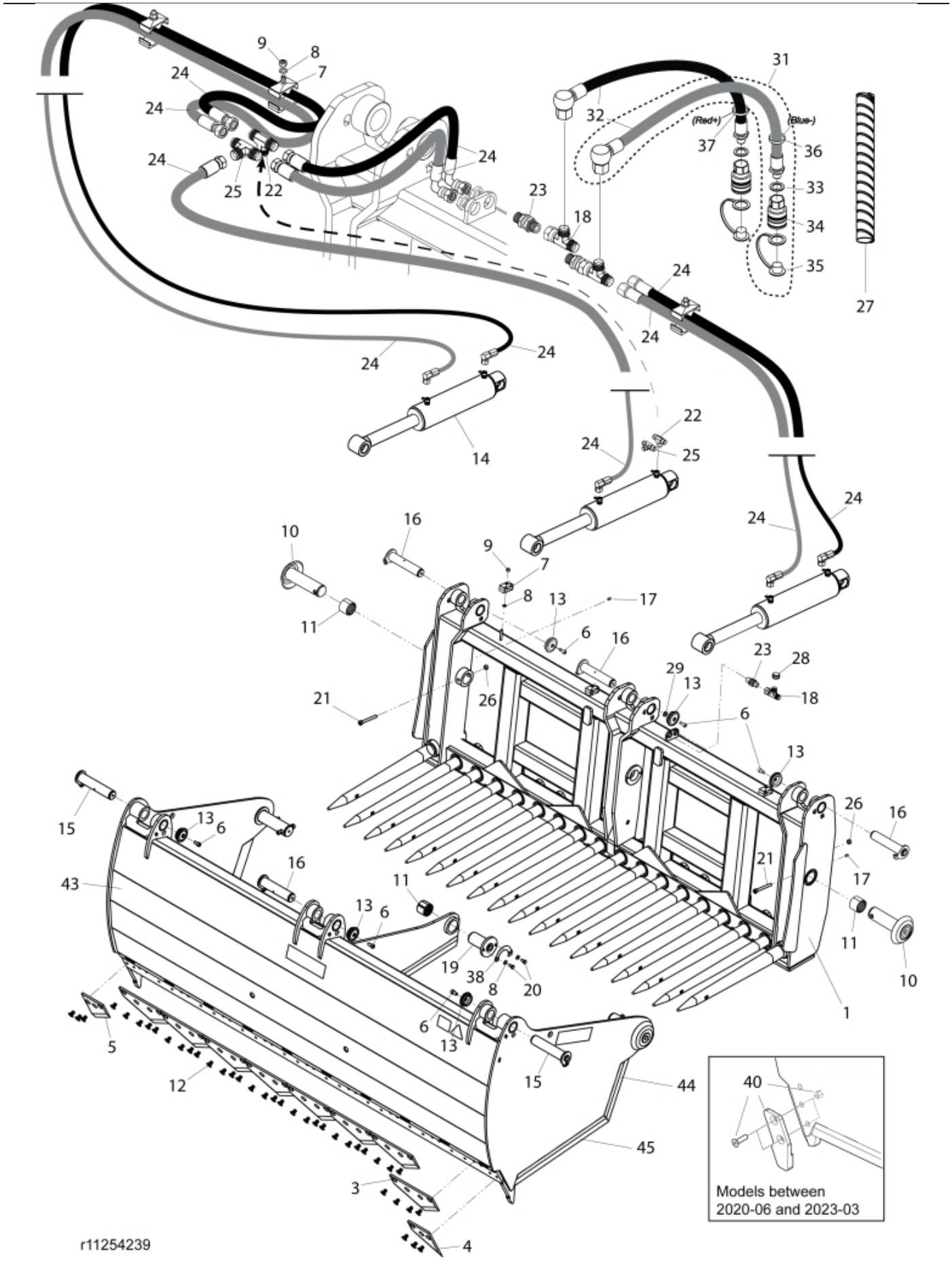

© 2025 Jost

Part assemblies		Silocut 225 SG BM		
Specification		Year From: 8/1/2016 12:00:00 AM		
PartNo	**Pos**	**Qty**	**Name**	**Specifications**
11254239		1	Silocut 225 SG BM	
60015833-17	1	1	Frame, without tines	
11262629-22	3	8	Cutting edge	250mm
60089924-22	4	1	Cutting edge LH	
60089923-22	5	1	Cutting edge RH	
5004917	6	6	Screw	
5016968	7	3	Hose clamp	
5013101	8	5	Washer	BRB 8,4 x 16
5011553	9	3	Nut	M6M M8 Loc-king
11262660	10	2	Pin	
5018909	11	3	Bushing	
5050610	12	38	Screw	MF6S M12X20 (12.9)
5215131	13	6	Locking cover	
60119714-1	14	3	Cylinder	2/4/2026 12:00:00 AM
9020124	15	2	Pin cpl.	
9020126	16	4	Pin cpl.	
5023005	17	2	Greaser	M 10 x 1
5028031	18	2	T-Adapter	
9020128	19	1	Pin cpl.	
5002051	20	2	Screw	M6S 8 x 20
5004956	21	2	Screw	MC6S M10 x 90
5027834	22	1	T-Adapter	G3/8" BSPP
11120580	23	2	Adapter cpl.	
10378391	24	1	Hose kit	
1120176	25	1	T-Adapter	R3/8" BSPP
5011554	26	2	Nut	Loc-King M10
5034439	27	4	Protection sleeve	
5028311	28	2	Plug	
5013110	29	1	Washer	BRB 10.5x22x2
11261413	31	2	Hydraulic hose cpl.	
1103243	32	1	• Hose	1/2"
5013611	33	1	• Copper Washer	
5044152	34	1	• Coupling	
5044155	35	1	• Dust Cover	
5022179	36	1	Cable tie	Blue
5022177	37	1	Cable tie	Red
60034182	38	1	Locking plate	
11254149	39	1	Attachment BM Large	
60092323	40	1	Service kit	
		1	• Tooth	
		1	• Tooth	
		4	• Screw	
		4	• Nut	M12 Loc
60060388-17	43	1	Jaw	
11261263	44	2	• Cutting edge	
60060723	45	2	• Cutting edge	
11137135		1	Decal	Silocut
11137188		2	Decal	225 SG

© 2025 Jost

1123674	1	Warning decal	"Read manual"
1123673	1	Warning decal	
11136459	1	Warning decal	Only for North Am. Warning triangle
11136516	1	Warning decal	
11136447	2	Warning decal	Only for North Am. DANGER
11137324	1	Warning decal	"Keep cutting edges sharp"
60018641	1	Warning decal	

© 2025 Jost