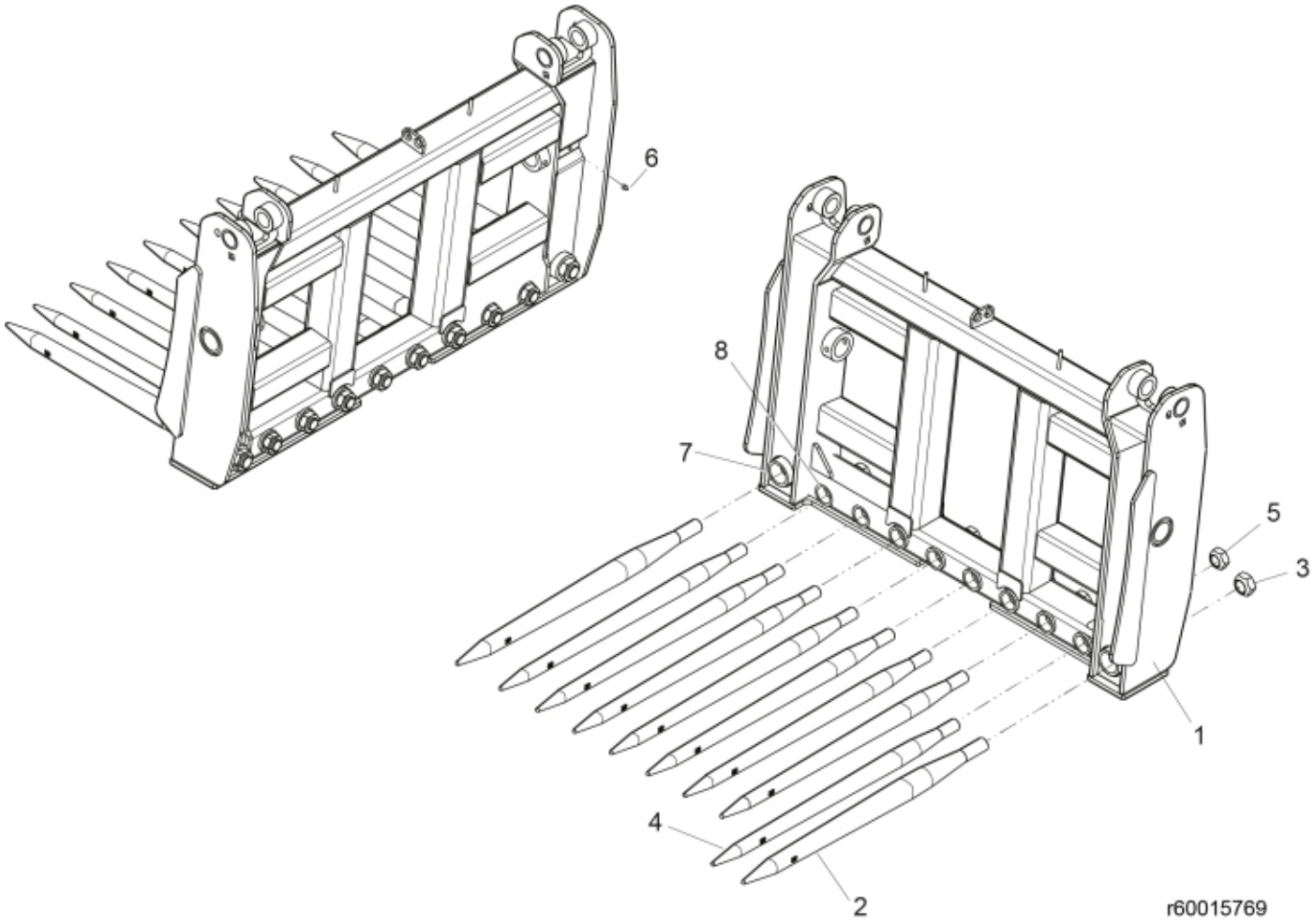

© 2025 Jost

Description	MK2
Part assemblies	Frame

PartNo	Pos	Qty	Name	Specifications
60015770-17	1	1	Frame, without tines	
5068117-17	2	2	Tine with nut	L=820mm (replaces 5068107)
5068119	3	2	• Nut	Conus 3
5068114-17	4	8	Tine with nut	L=827mm (replaces 5068003)
5068116	5	8	• Nut	Conus 2
5023005	6	2	Greaser	M 10 x 1
11262646	7	2	Sleeve	Conus 3
60016205	8	8	Sleeve	Conus 2

© 2025 Jost