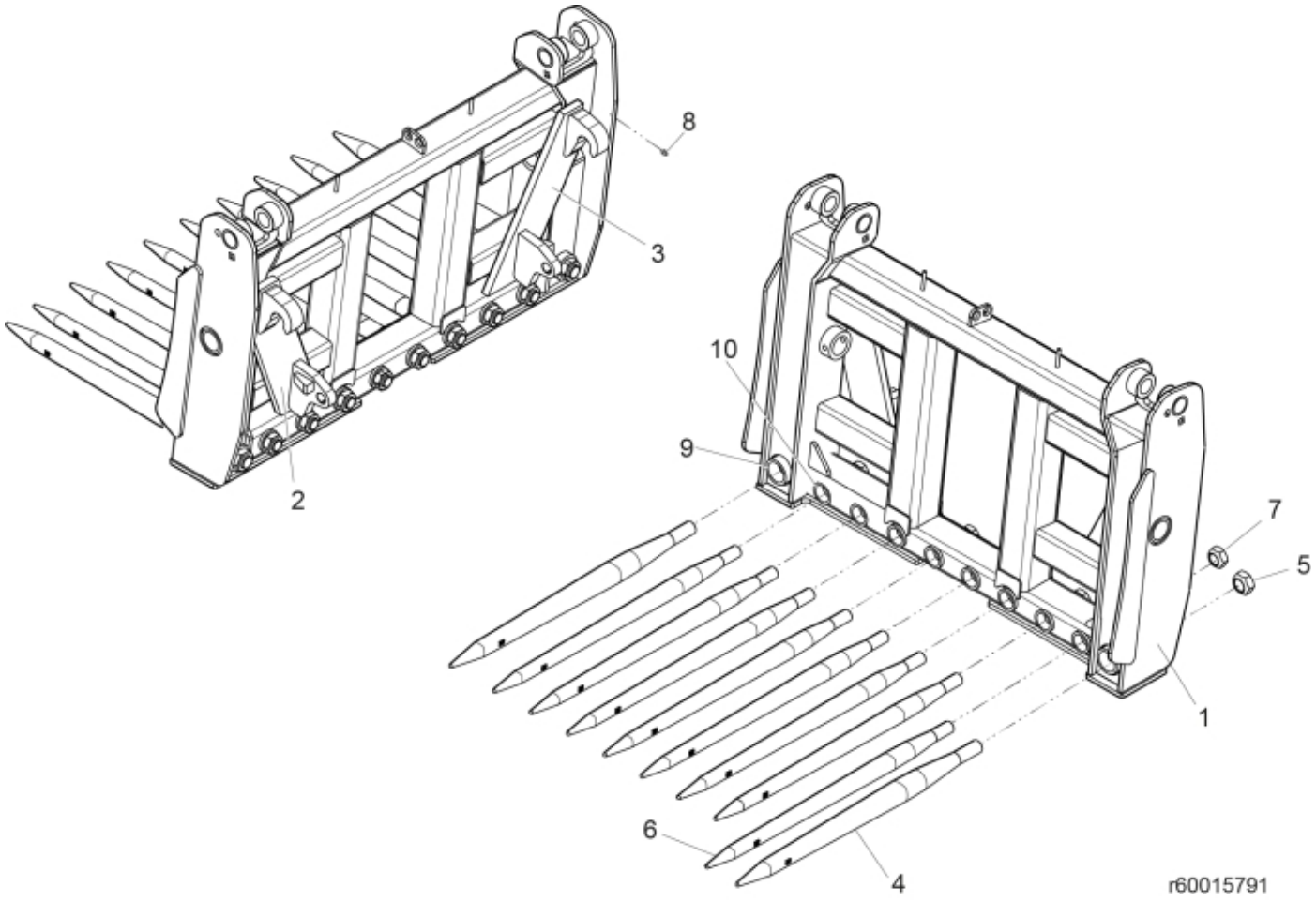

© 2025 Jost

Description	Silocut M+, SG MKII
Part assemblies	Frame

PartNo	Pos	Qty	Name	Specifications
60015792-17	1	1	Frame, without tines	
60012027	2	1	Implement hook LH	
60012031	3	1	Implement hook RH	
5068117-17	4	2	Tine with nut	L=820mm (replaces 5068107)
5068119	5	2	• Nut	Conus 3
5068114-17	6	8	Tine with nut	L=827mm (replaces 5068003)
5068116	7	8	• Nut	Conus 2
5023005	8	2	Greaser	M 10 x 1
11262646	9	2	Sleeve	Conus 3
60016205	10	8	Sleeve	Conus 2

© 2025 Jost