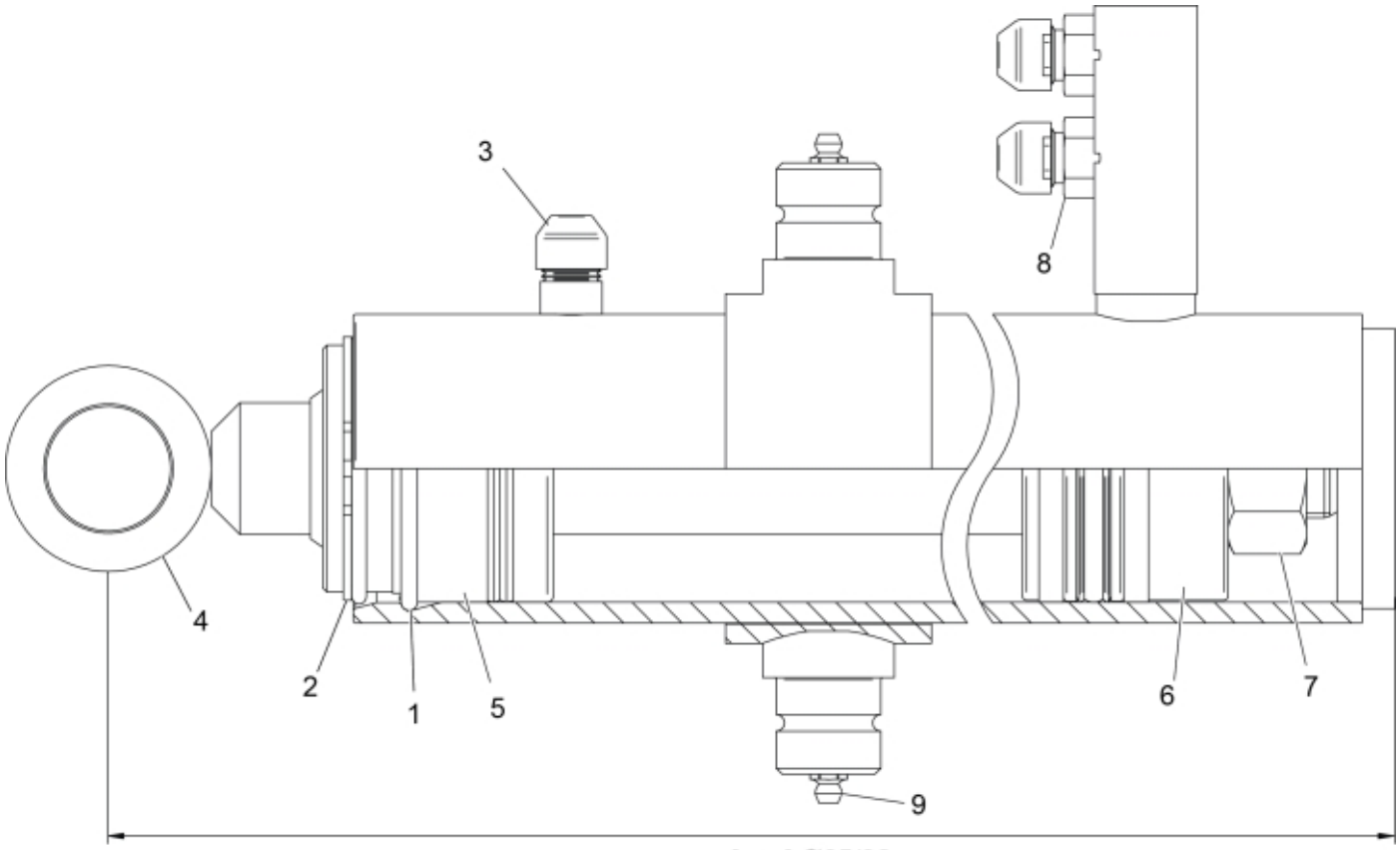

[mm] Ø65/32
C-C (170 - 350)

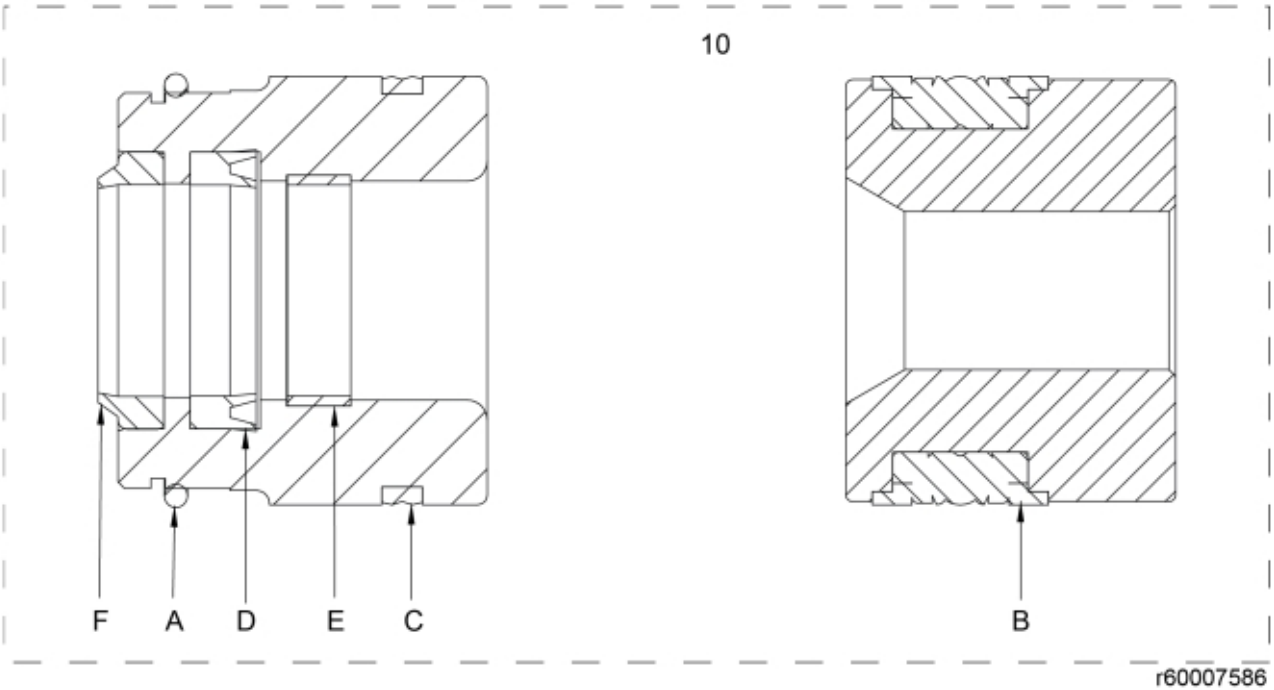

r60007586

© 2025 Jost

Description	65/32
Part assemblies	Cylinder
Specification	Specification: Glossy Black (12723410)

PartNo	Pos	Qty	Name	Specifications
5016668	1	1	Retaining ring	
5016608	2	1	Circlip	
5028083	3	3	Plug	
12723413	4	1	Piston rod	
12716111	5	1	Bearing	
60017154	6	1	Piston	
5011930	7	1	Nut	M6M M24
5021901	8	2	Grease fitting	M6
60019183	9	1	Seal kit	for cyl 60007586
5037242	A	1	• O-ring	58,74 x 3,53
60017157	B	1	• Piston seal	
5039002	C	1	• Cover seal	65 x 59,6 x 6,2
5040057	D	1	• Seal kit	43 x 31 x 10
5040058	E	1	• Guide ring	35 x 9.6
5040059	F	1	• Wiper	42 x 31 x 10

© 2025 Jost