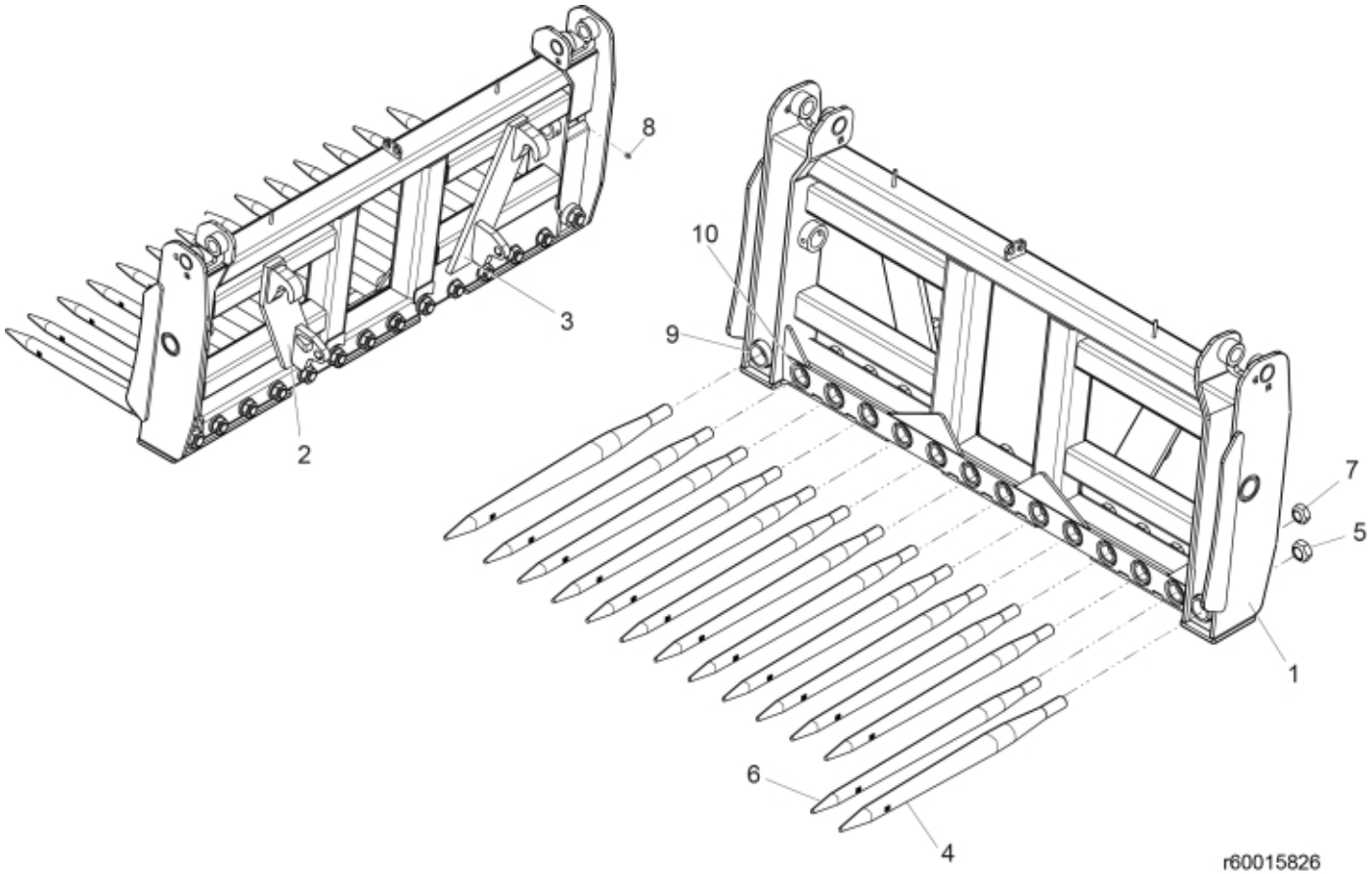

© 2025 Jost

Description	MK2
Part assemblies	Frame 175 SG Euro

PartNo	Pos	Qty	Name	Specifications
60015825	1	1 PCS	Frame, AS-kit	
60012027	2	1	Implement hook LH	
60012031	3	1	Implement hook RH	
5068117-17	4	2	Tine with nut	L=820mm (replaces 5068107)
5068119	5	1	• Nut	Conus 3
5068114-17	6	12	Tine with nut	L=827mm (replaces 5068003)
5068116	7	1	• Nut	Conus 2
5023005	8	2	Greaser	M 10 x 1
11262646	9	2	Sleeve	Conus 3
60016205	10	12	Sleeve	Conus 2

© 2025 Jost