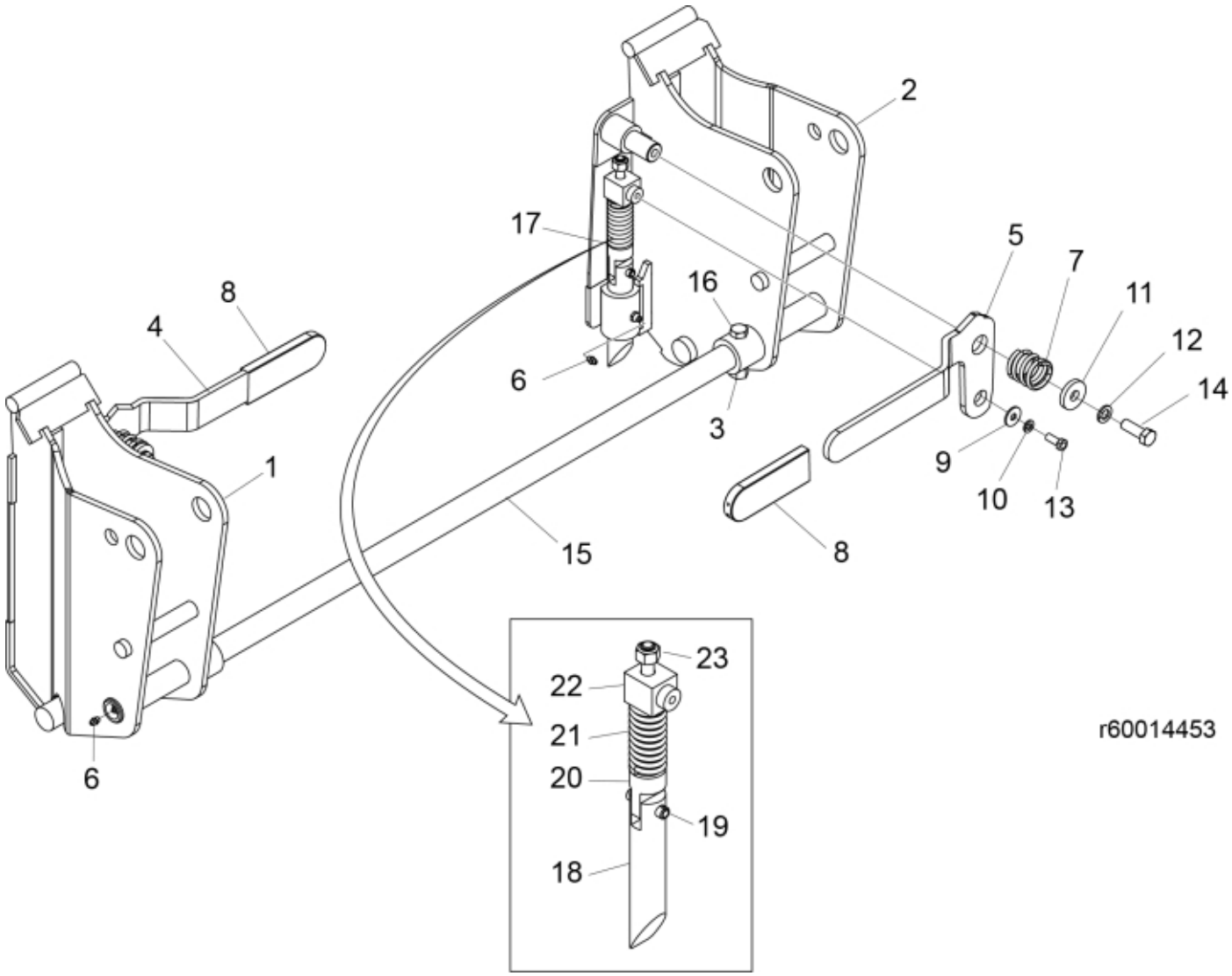

© 2025 Jost

Description	Tool carrier
Part assemblies	Skid Steer
Specification	Specification: Glossy Black. Replaces 60005497
	Year From: 11/28/2016 12:00:00 AM

PartNo	Pos	Qty	Name	Specifications
60013571-1	1	1 PCS	• Tool carrier	LH
60014437-1	2	1 PCS	• Tool carrier	RH
5011555	3	2	• Nut	M12 Loc
5221533	4	1	• Handle LH	
5221534	5	1	• Handle RH	
5023005	6	4	• Greaser	M 10 x 1
5221539	7	2	• Spring	
5022144	8	2	• Cover	
5013916	9	2	• Washer	8,4x24x2
5013404	10	2	• Spring washer	8,1x14,8x2
5013924	11	2	• Washer	13x36x6
5013408	12	2	• Spring washer	FBB 12,2 x 21,1 x 2,5
5002051	13	2	• Screw	M6S 8 x 20
5002103	14	2	• Screw	M12 x 35
60014460	15	1 PCS	• Shaft	
5002108	16	2	• Screw	M6S M12x60
60009527	17	2 PCS	• Pin cpl.	
60009534	18	1 PCS	•• Pin	
5016996	19	1	•• Pin	
60009533	20	1 PCS	•• Rod	
5221538	21	1 PCS	•• Spring	
60009694	22	1 PCS	•• Lug	
5011554	23	1	•• Nut	Loc-King M10

© 2025 Jost