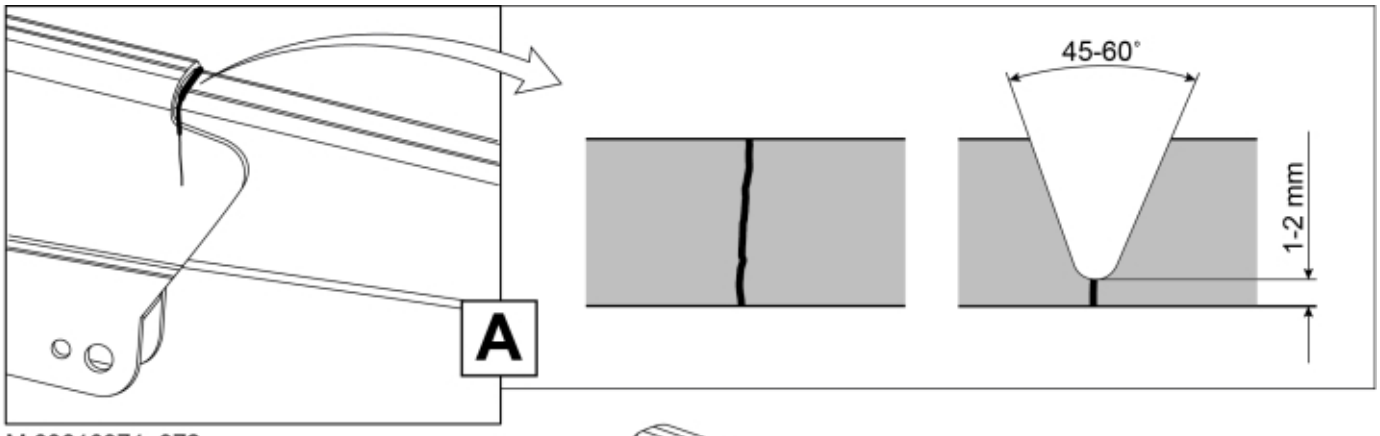

M 60016971_972

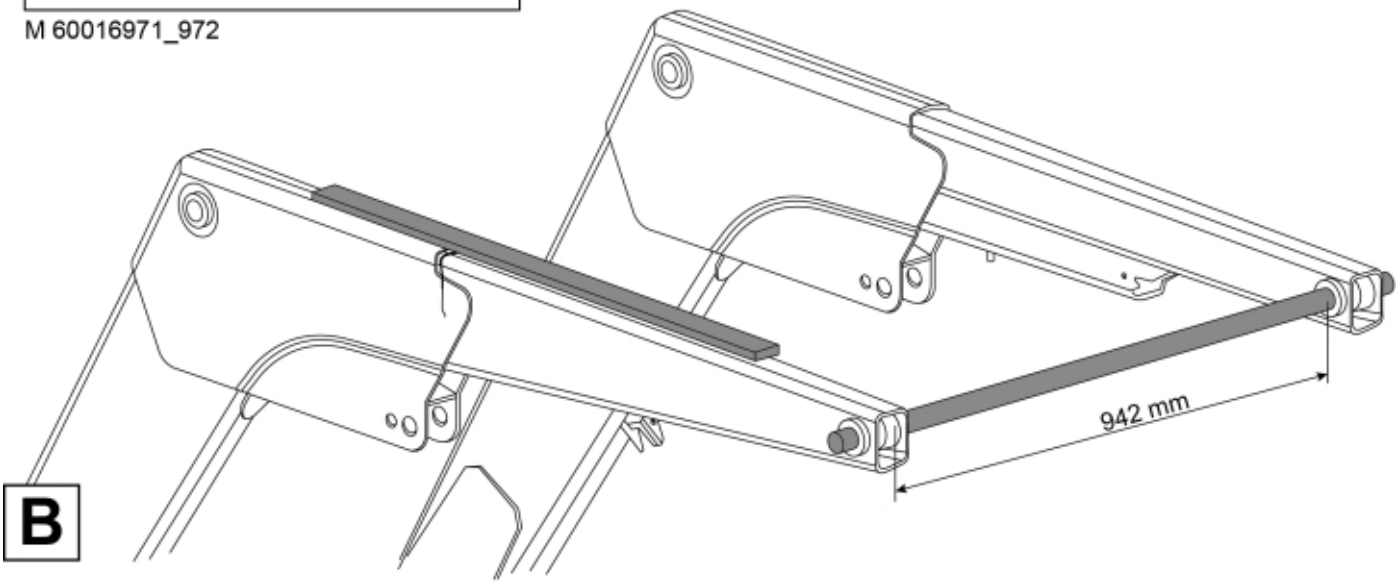



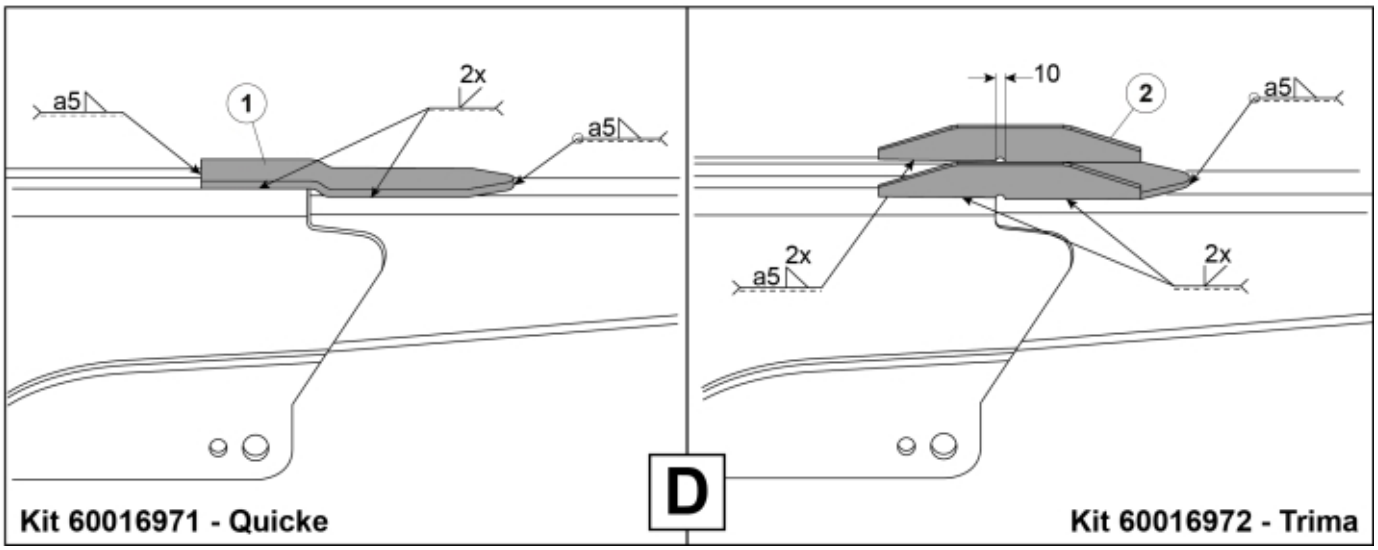

© 2025 Jost

Part assemblies	Repair Kit
Specification	Specification: Trima

PartNo	Pos	Qty	Name	Specifications
60016972			Repair Kit	Trima
60016884	1	2 PCS	• Plate	

© 2025 Jost