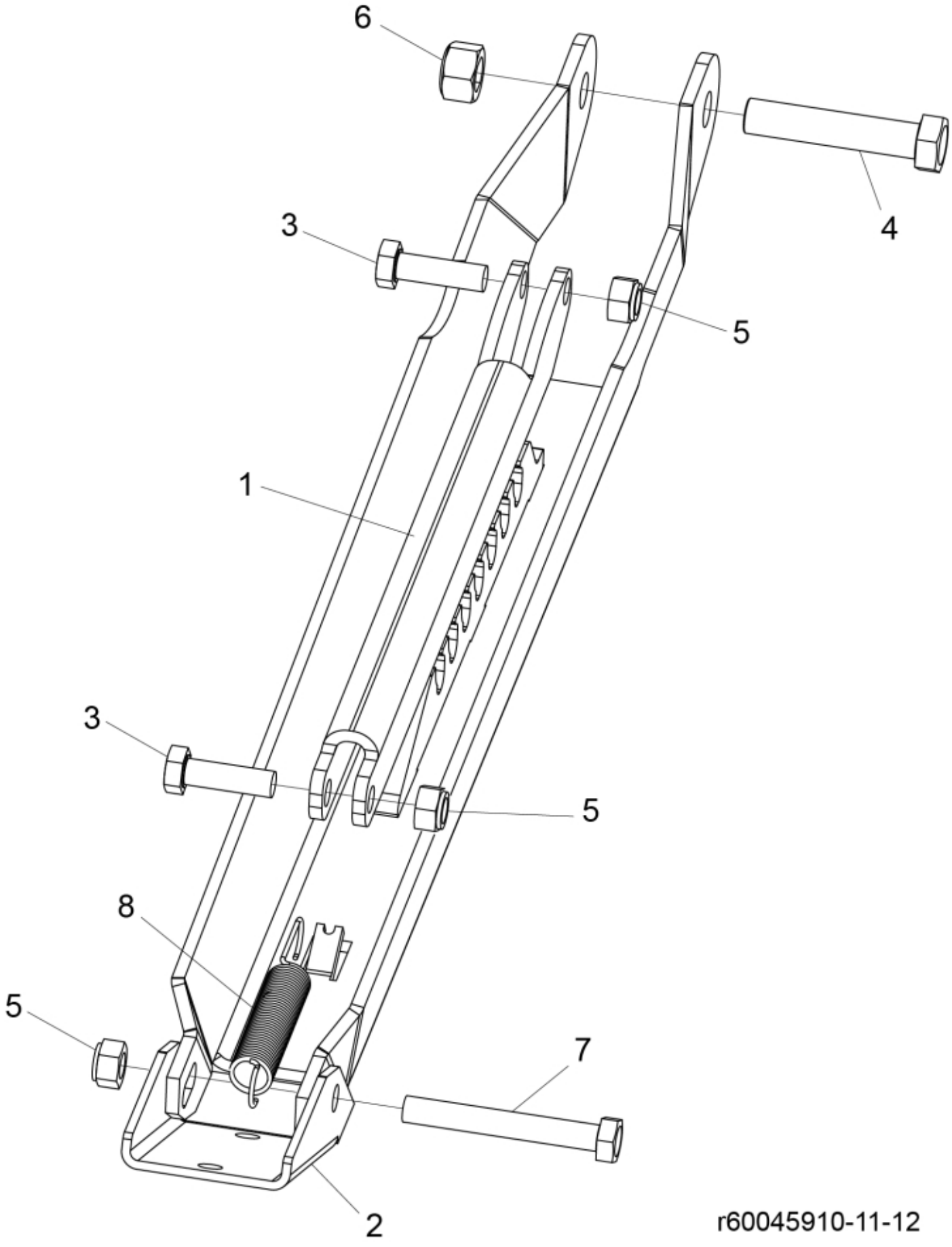

© 2025 Jost

Part assemblies		Support leg		
Specification		Specification: MF Red		
PartNo	**Pos**	**Qty**	**Name**	**Specifications**
60104233-19	1	1	Stay	MF Red
60104308-19	2	1	Foot	MF Red
5002104	3	2	Screw	M6S M12X40 (8.8)
5002159	4	1	Screw	M6S M16 x 80 (8.8)
5011911	5	3	Nut	M12
5011569	6	1	Nut	
5002936	7	1	Screw	M6S 8.8 fzb M12 x 1,75 x 90
5021914	8	1	Spring	

© 2025 Jost