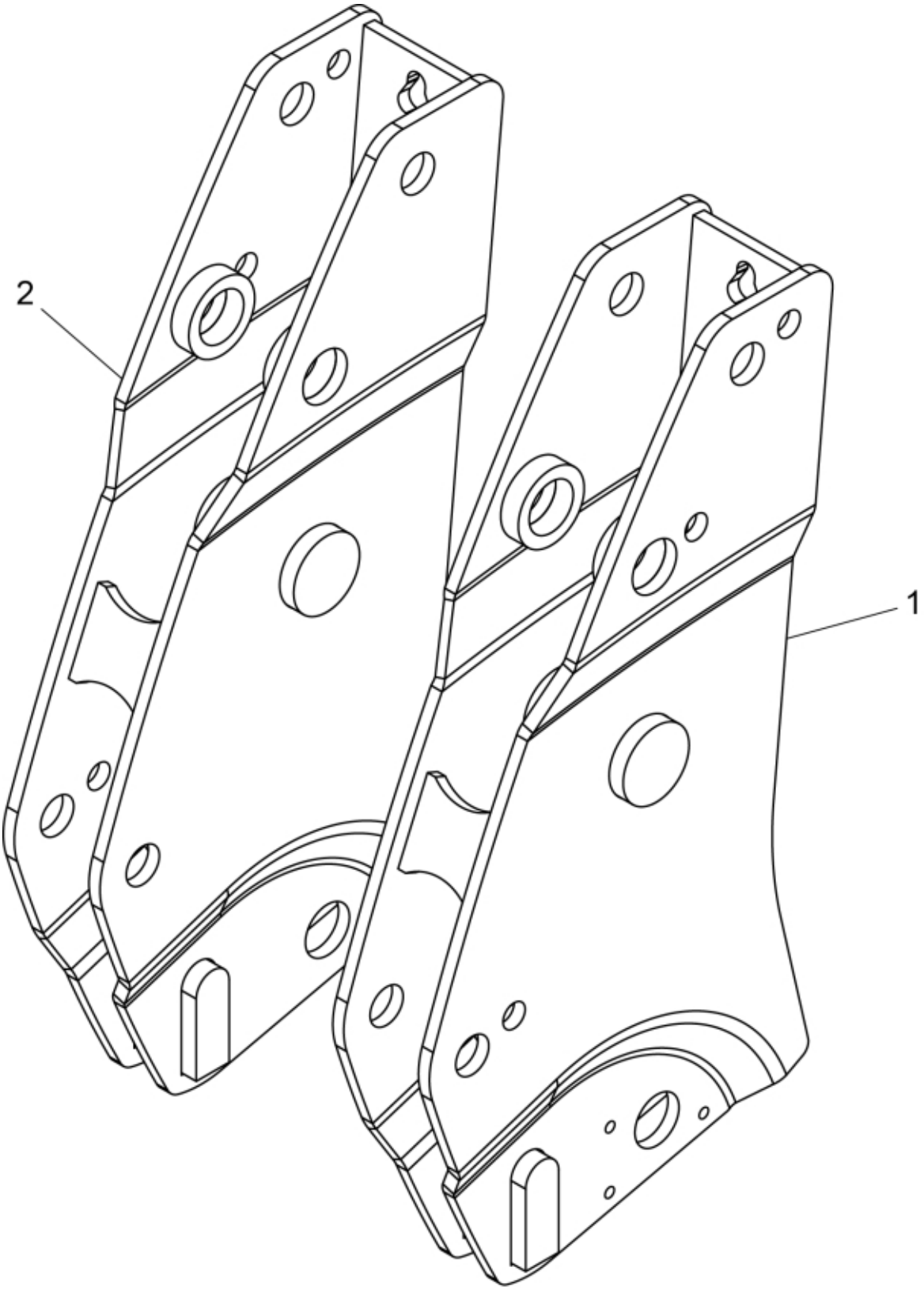



© 2025 Jost

| | |
|---|---|
| **Description** | MSL |
| **Part assemblies** | Bearing box |

| PartNo | Pos | Qty | Name | Specifications |
|---|---|---|---|---|
| 60004468-19 | 1 | 1 PCS | Bearing box LH | MF Red |
| 60004577-19 | 2 | 1 PCS | Bearing box RH | MF Red |


© 2025 Jost