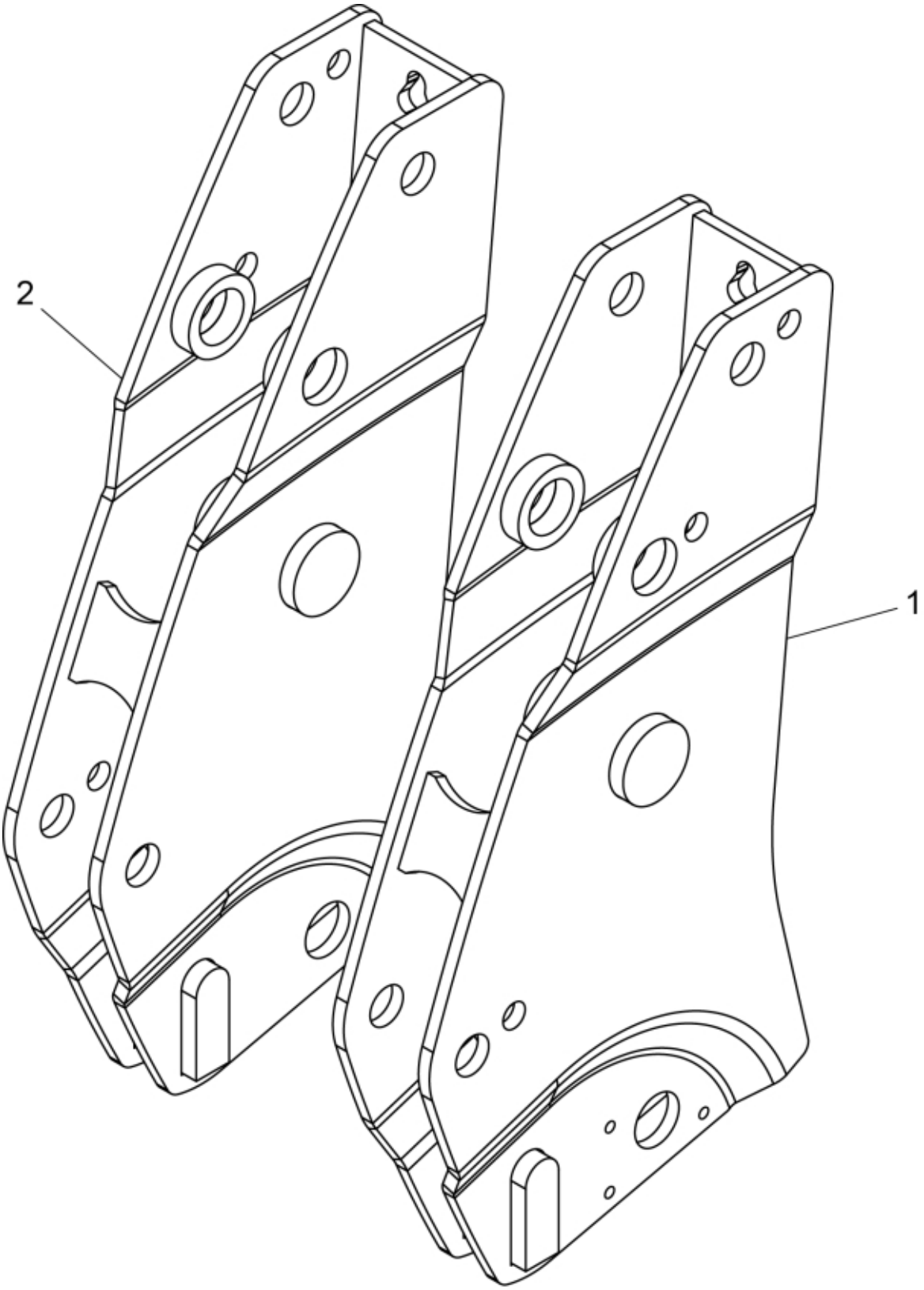

© 2025 Jost

Description	MSL
Part assemblies	Bearing box

PartNo	Pos	Qty	Name	Specifications
60005956-19	1	1 PCS	Bearing box LH	MF Red
60005987-19	2	1 PCS	Bearing box RH	MF Red

© 2025 Jost