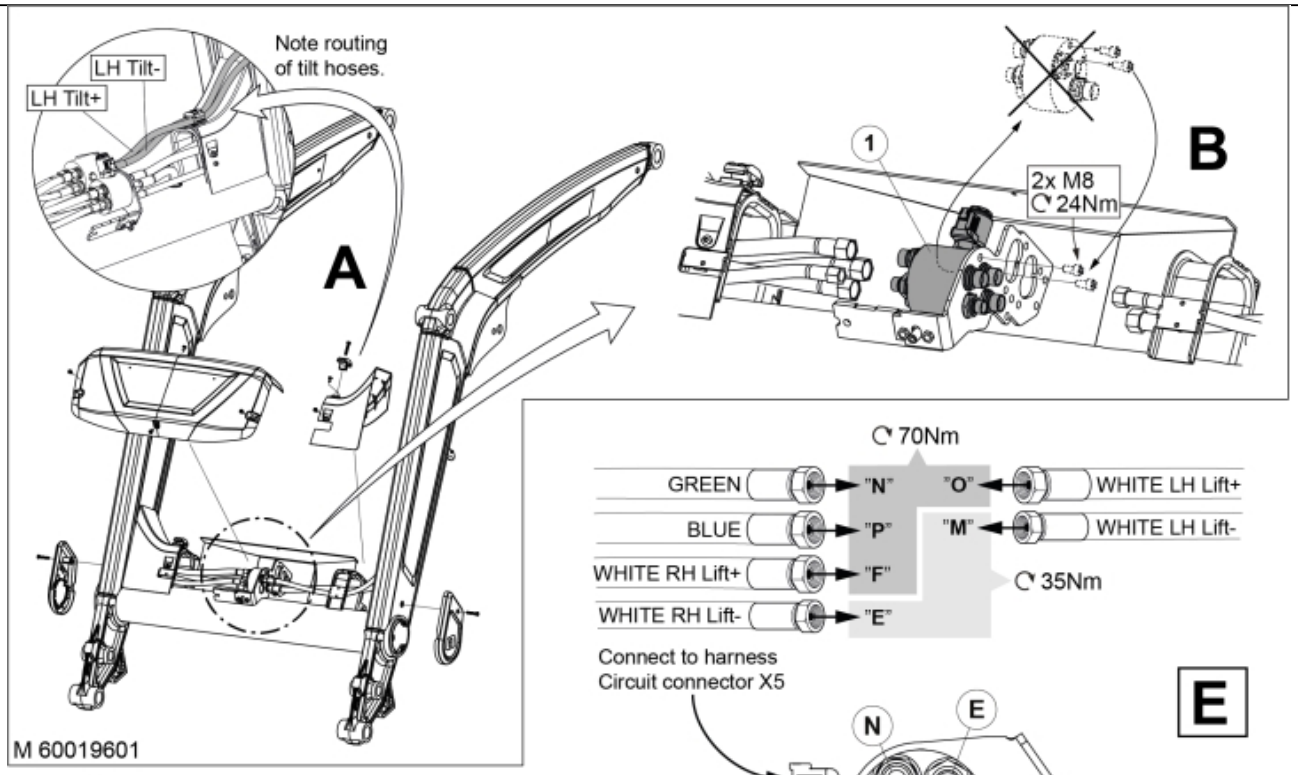
Note routing
of tilt hoses.
LH Tilt-
LH Tilt+
A
M 60019601
1
2x M8
24Nm
B

70Nm
GREEN
"N"
"O"
WHITE LH Lift+
BLUE
"P"
"M"
WHITE LH Lift-
WHITE RH Lift+
"F"
35Nm
WHITE RH Lift-
"E"

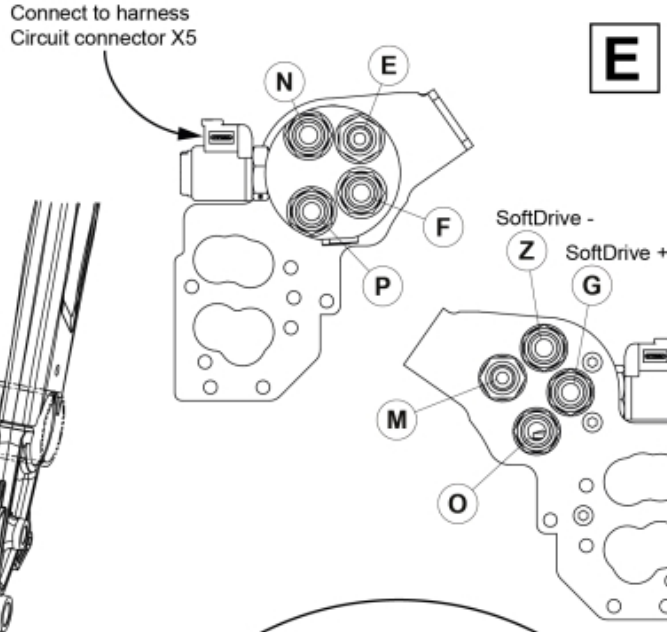
Connect to harness
Circuit connector X5
E
N
E
F
P
SoftDrive -
Z
SoftDrive +
G
M
O

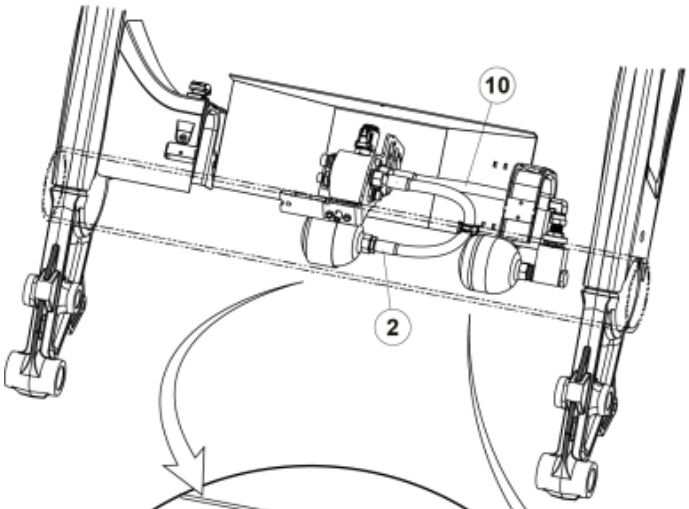
10
2

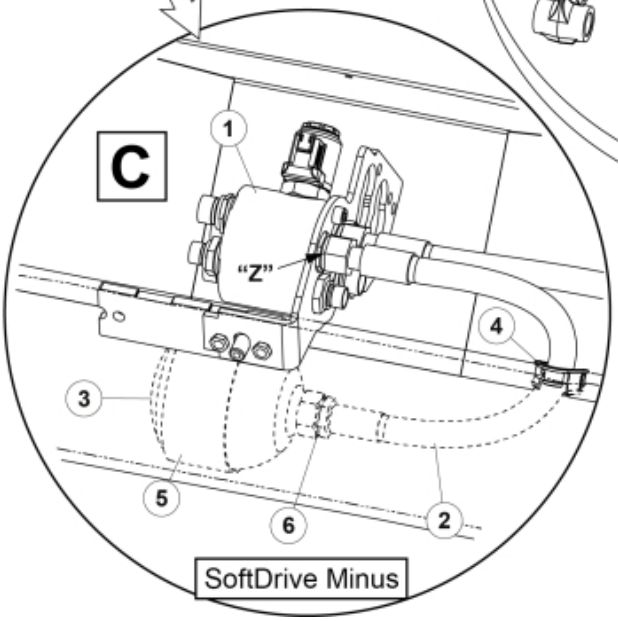
C
1
"Z"
4
3
5
6
2
SoftDrive Minus

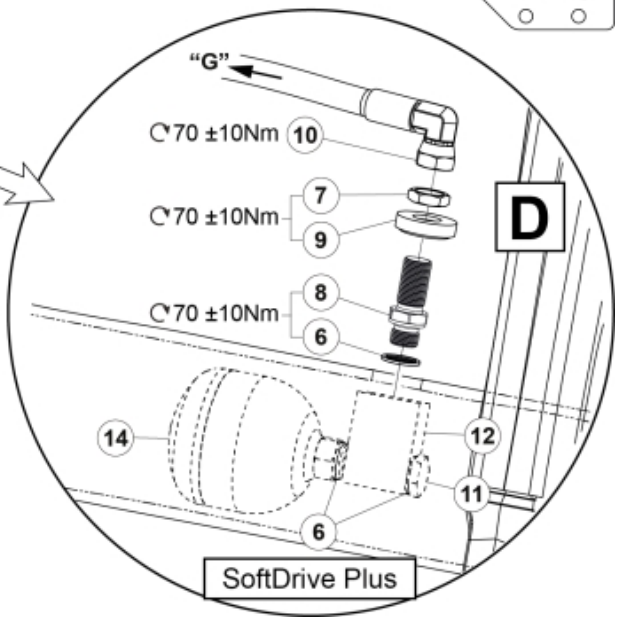
"G"
70 ±10Nm
10
70 ±10Nm
7
9
D
70 ±10Nm
8
6
14
12
11
6
SoftDrive Plus

© 2025 Jost

Part assemblies	SoftDrive kit Plus
Specification	Specification: S/N - 101200900259

PartNo	Pos	Qty	Name	Specifications
60019601			SoftDrive kit Plus	S/N - 101200900259 Replaced by 60050231
4501145	1	1	Block cpl	Lift, Replaces 4500131, 5/1/2019 12:00:00 AM
60005564	2	1	Hose	1/2" L=400
5034102	3	1	Accumulator	
60008713	4	1	Edge cover	
60096821	5	1	Bracket	
5013853	6	4	Dowty washer	Tredo 1/2", Part is included in kit 60007907 Hose cpl., 9032177 Hose cpl.
60004682	7	1	Nut	1/2"
60004683	8	1	Adaptor	1/2"
60009280	9	1	Washer	
60005585	10	1	Hose	1/2" L=340
519045	11	1	Plug	1/2"
60029617	12	1	Block	1/2" (60005958)
4501258	14	1	Accumulator Kit	

© 2025 Jost