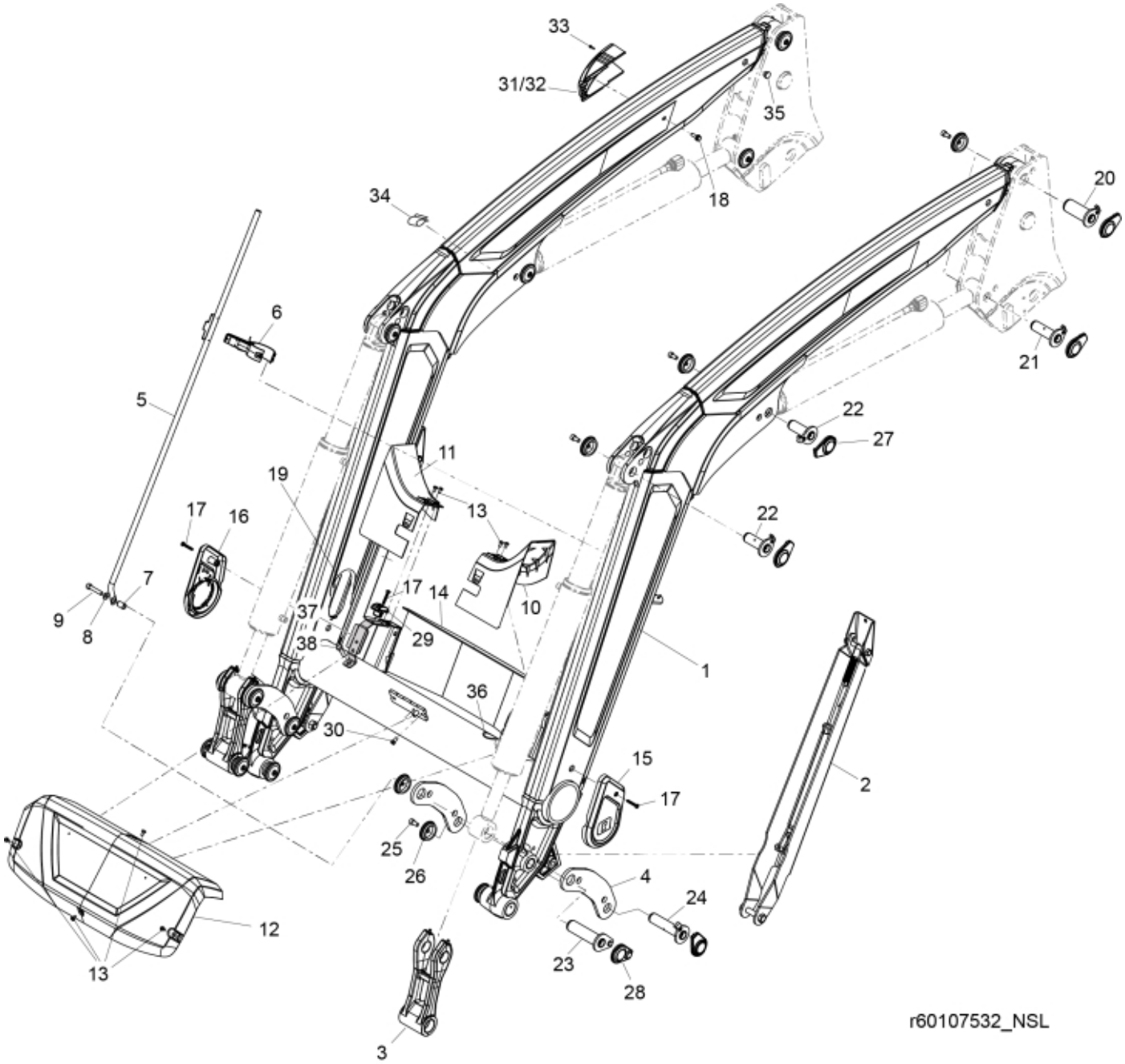
33
31/32
35
18
34
20
6
21
5
22
27
11
19
22
13
17
16
17
14
10
7
9
8
37
38
29
1
36
30
15
2
17
25
26
4
24
12
23
28
13
3
r60107532_NSL

© 2025 Jost

Part assemblies Loader beam

PartNo	Pos	Qty	Name	Specifications
60143335-19	1	1	Loader beam w. bushings	MF Red
60045911-19	2	2	Support leg	MF Red
60018637	3	2	Link w. bushings	Glossy Black
60062380-19	4	4	Link	MF Red For loaders produced from 2021/01/13
60003914-19	4*	4	Link	MF Red For loaders produced until 2021/01/12
5215216	5	1	Indicator rod	
5215209	6	1	Holder kit	
5215227	7	1	Spacer	
5013110	8	1	Washer	BRB 10.5x22x2
5050605	9	1	Screw	MC6S 10x50 Loc
60104343	10	1	Cover LH	DM
60104335	11	1	Cover RH	DM
60104341	12	1	Centre Cover	
5051982	13	10	Screw	M6x8
60046315-1	14	1	Protection plate	Glossy Black
60038007	15	1	Cover LH	Replaces 60107457
60038006	16	1	Cover RH	Replaces 60107456
5051983	17	4	Screw	M6x40
5006018	18	1	Screw	M6SF M8X25
60120968	19	2	Edge cover	19,5 mm for loader beam with reinforcement plates
60009870	19*	2	Edge cover	16 mm for loader beam without reinforcement plates
60000350	20	2	Pivot Pin	D=40, L=96 mm
60018047	21	2	Pivot Pin	D=30, L=96mm
60004177	22	4	Pivot Pin	D=30, L=80mm
60003247	23	2	Pivot Pin	D=35, L=127mm
60018046	24	2	Pivot Pin	D=30, L=127mm
5050608	25	15	Screw	MC6S M10x20 Loc
5215131	26	16	Locking cover	
60008692	27	14	Plastic cover	
60107382	28	2	Plastic cover	
60007082	29	2	Hose clamp	
5002058	30	2	Screw	M6S 8x16
60019418	31	1	Cover	Std
60019419	32	1	Cover	L3rd
5050442	33	1	• Screw	STS T40x12
60011125	34	2	Cover	
60021154	35	4	Plug	
60008713	36	1	Edge cover	
60070968	37	2	Hose guide	
5002077	38	2	Screw	M6S 10x30

© 2025 Jost