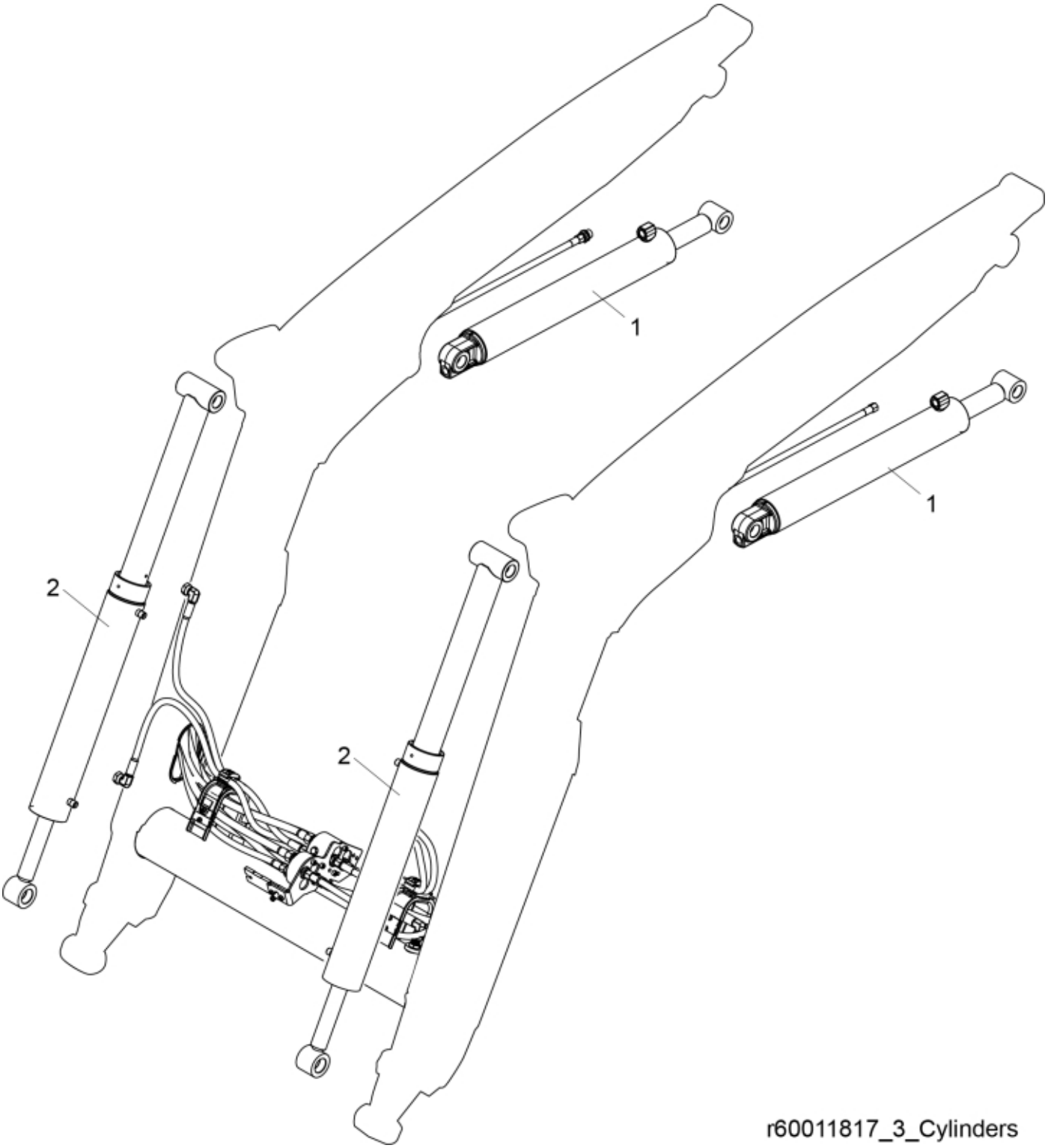

© 2025 Jost

Part assemblies Cylinder

Cylinder:Cylinder part number is written on the cylinder itself. Have a look before searching for parts.

PartNo	Pos	Qty	Name	Specifications
60050750-1	1	2 PCS	Lift Cylinder	Glossy Black For loaders produced from 2020/09/03
60007256-1	1*	2 PCS	Lift Cylinder	Glossy Black For loaders produced until 2020/09/02
60050733-1	2	2 PCS	Tilt Cylinder	Glossy Black For loaders produced from 2020/09/02
60019003-1	2*	2 PCS	Tilt Cylinder	Glossy Black For loaders produced until 2020/09/01

© 2025 Jost