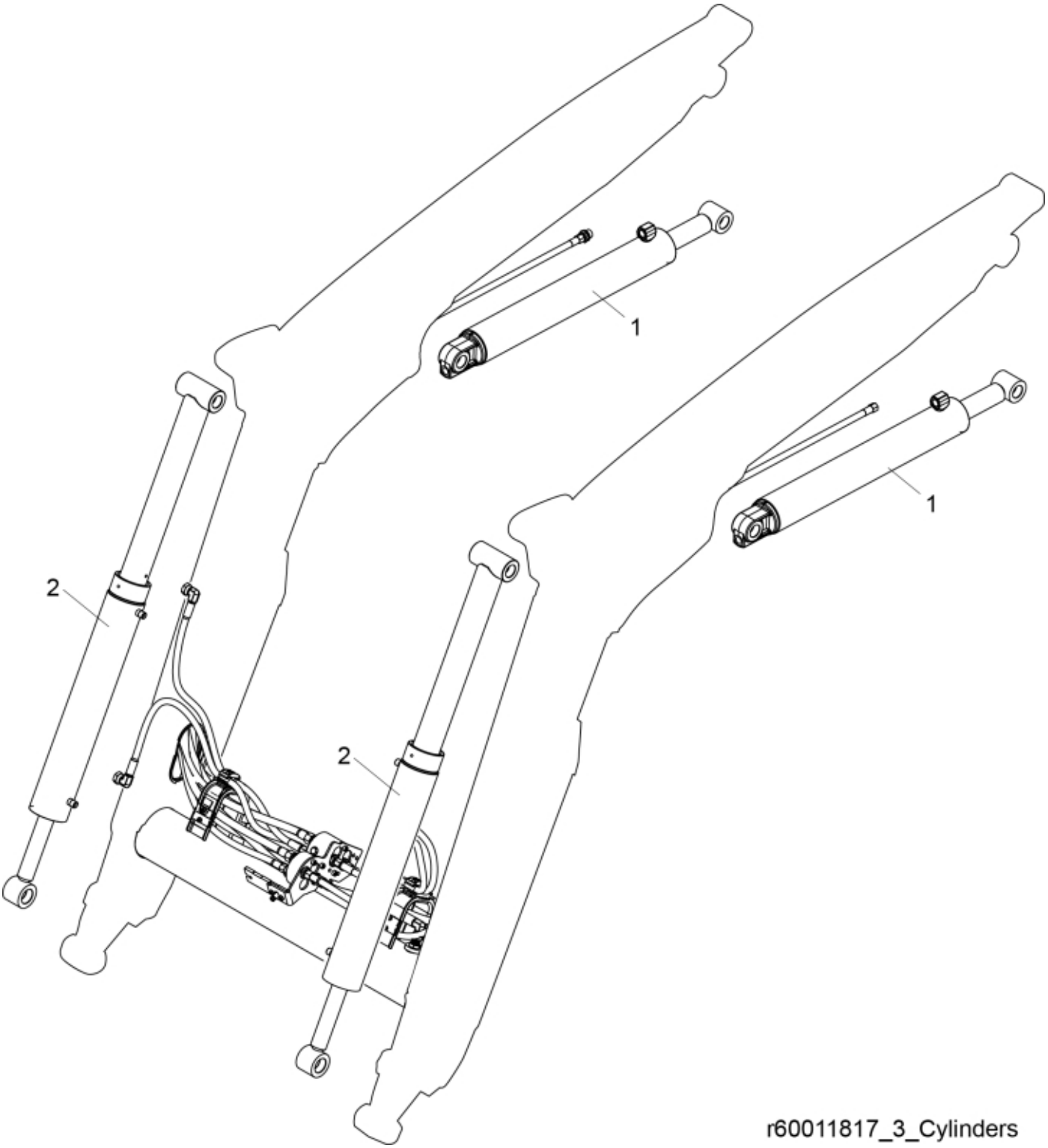

© 2025 Jost

Part assemblies	Cylinder

Cylinder:Cylinder part number is written on the cylinder itself. Have a look before searching for parts.

PartNo	Pos	Qty	Name	Specifications
60054997-1	1	2 PCS	Lift Cylinder	Glossy Black For loaders produced from 2020/10/16
60002248-1	1*	2 PCS	Lift Cylinder	Glossy Black For loaders produced until 2020/10/15
60019004-1	2	2	Tilt Cylinder	Glossy Black For loaders produced from 2020/10/16
60019023-1	2*	2 PCS	Tilt Cylinder	Glossy Black For loaders produced until 2020/10/15

© 2025 Jost