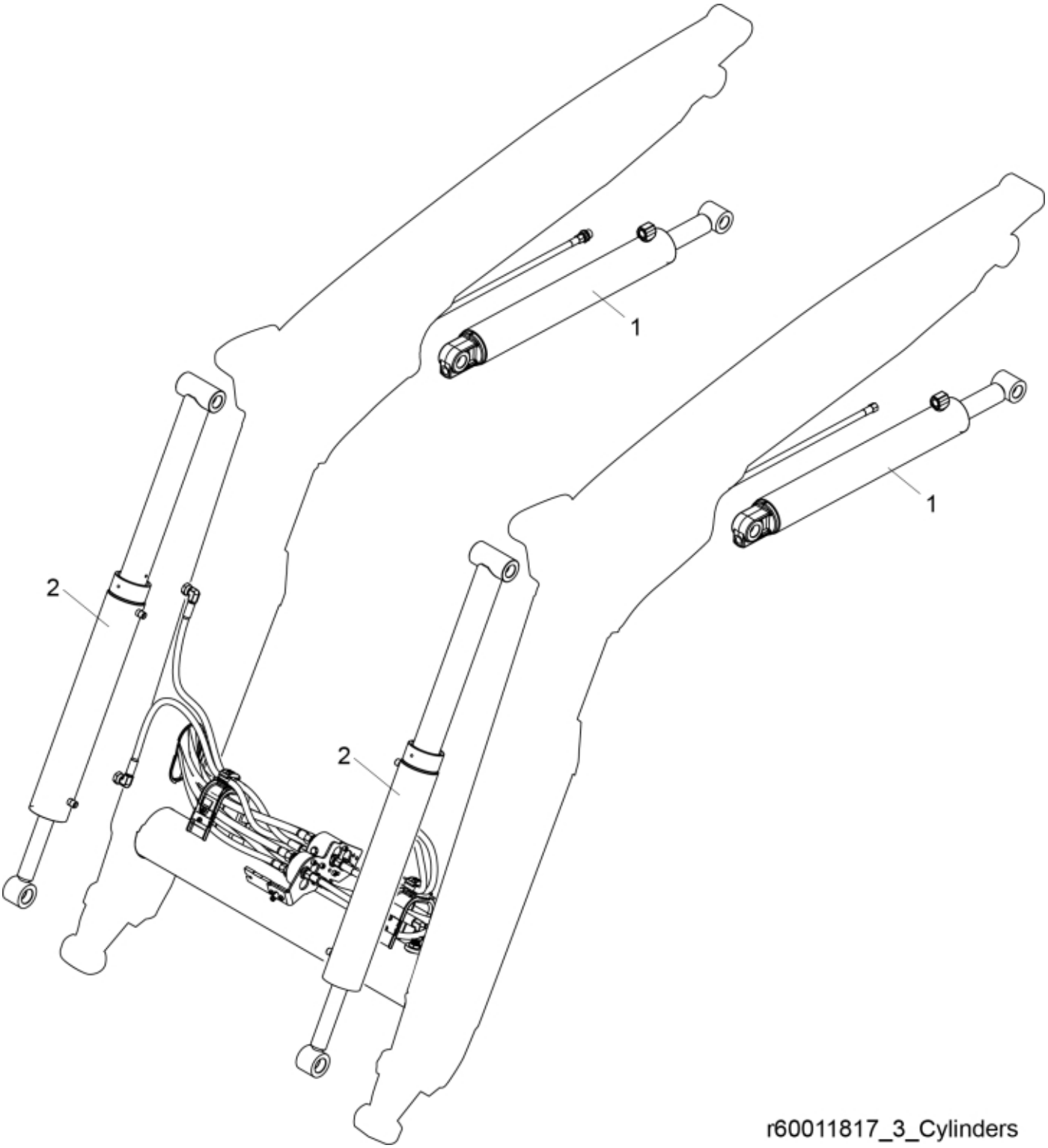

© 2025 Jost

Part assemblies	Cylinder

Cylinder:Cylinder part number is written on the cylinder itself. Have a look before searching for parts.

PartNo	Pos	Qty	Name	Specifications
60070446-1	1	2	Lift Cylinder	Glossy Black, 101221600371 For loaders produced from 2022/05/06
60005614-1	1*	2	Lift Cylinder	Glossy Black For loaders produced until 2022/05/05
60019025-1	2	2 PCS	Tilt Cylinder	Glossy Black

© 2025 Jost